DAIKIN

INSTALLATION MANUAL

VRV III System air conditioner

RXYQ8P7W1BR1
RXYQ10P7W1BR1
RXYQ12P7W1BR1
RXYQ14P7W1BR1
RXYQ16P7W1BR1
RXYQ18P7W1BR1

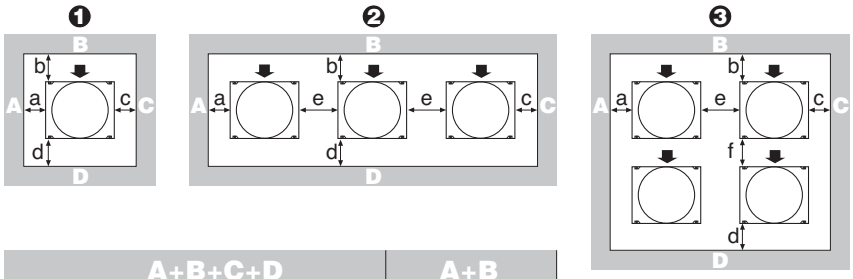

	A+B+C+D		A+B
❶	a 10 mm b 300 mm c 10 mm d 500 mm	a 50 mm b 100 mm c 50 mm d 500 mm	a 200 mm b 300 mm
❷	a 10 mm b 300 mm c 10 mm d 500 mm e 20 mm	a 50 mm b 100 mm c 50 mm d 500 mm e 100 mm	a 200 mm b 300 mm e 400 mm
❸	a 10 mm b 300 mm c 10 mm d 500 mm e 20 mm f 600 mm	a 50 mm b 100 mm c 50 mm d 500 mm e 100 mm f 500 mm	
❹	a 10 mm b 300 mm c 10 mm d 500 mm e 20 mm	a 50 mm b 100 mm c 50 mm d 500 mm e 100 mm	

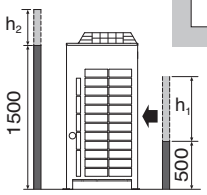

$h_1>0 \rightarrow b \geq b+\frac{h_1}{2}$

$h_2>0 \rightarrow d \geq d+\frac{h_2}{2}$

1

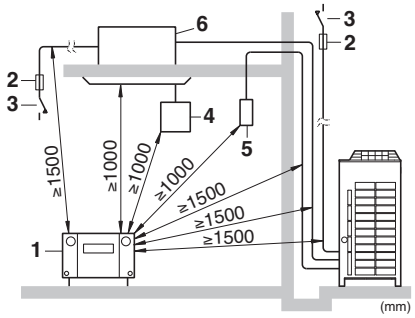

2

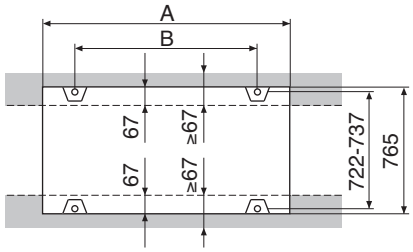

3

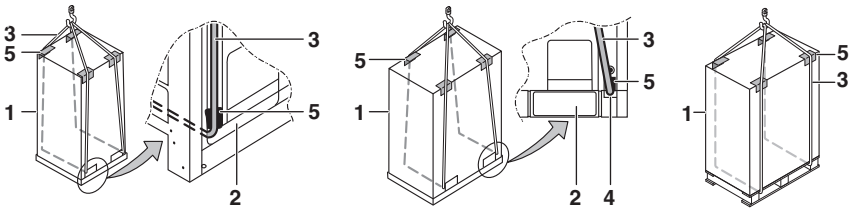

4

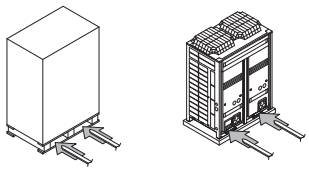

5

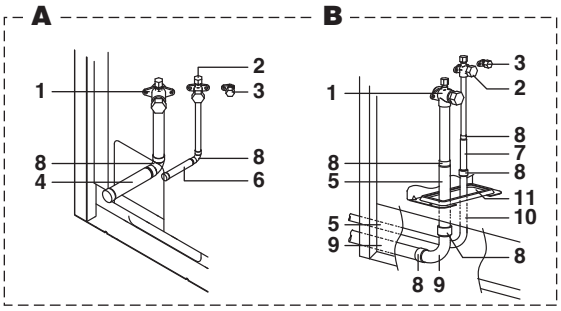

6

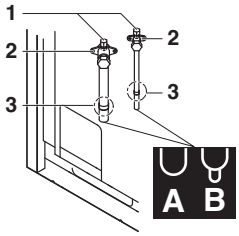

7

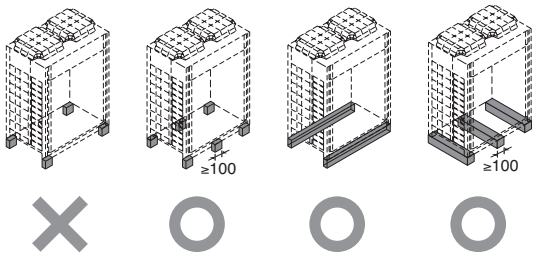

8

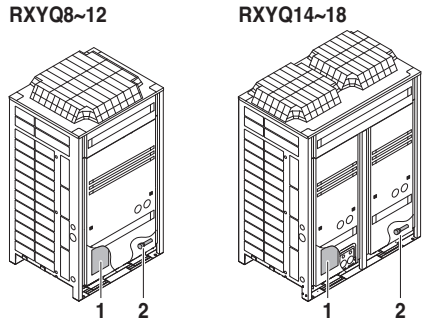

9

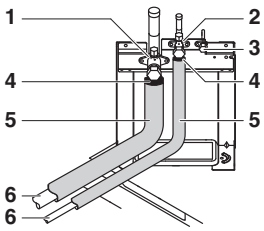

10

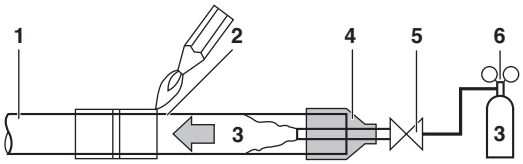

11

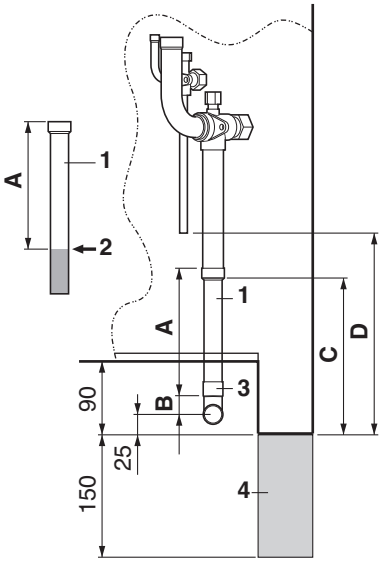

12

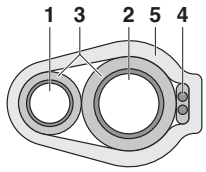

13

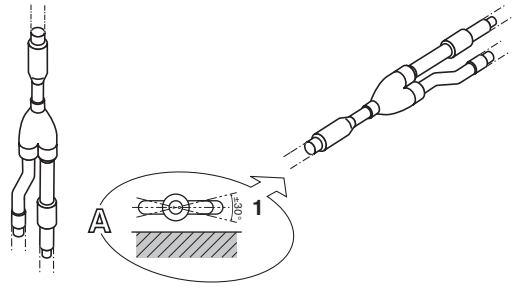

14

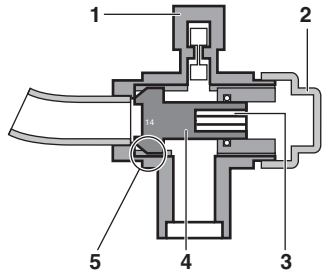

15

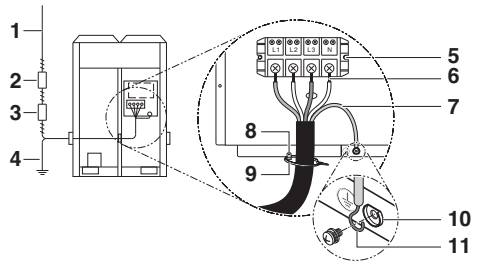

16

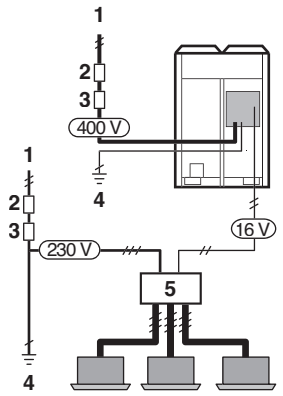

17

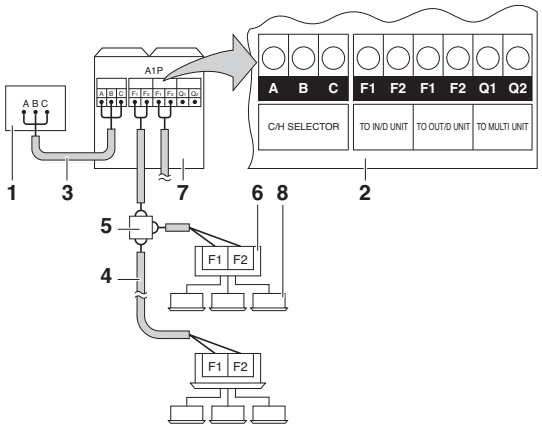

18

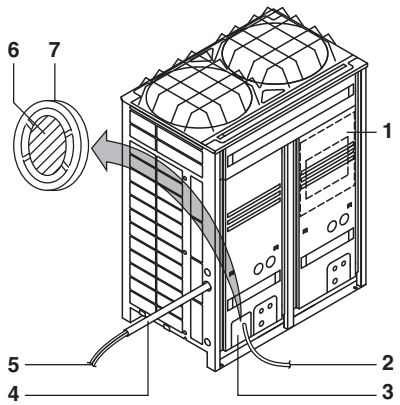

19

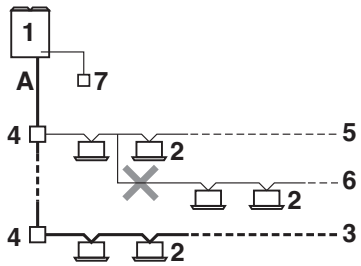

20

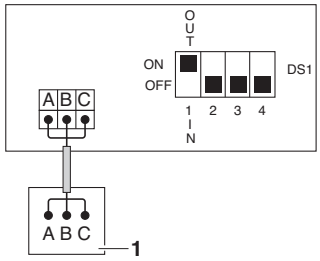

21

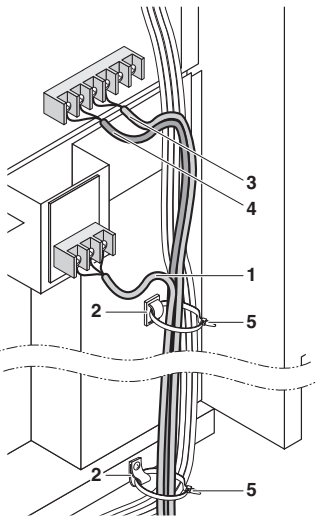

22

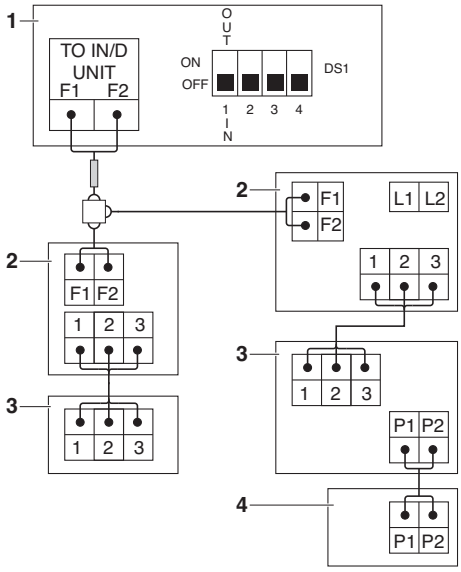

23

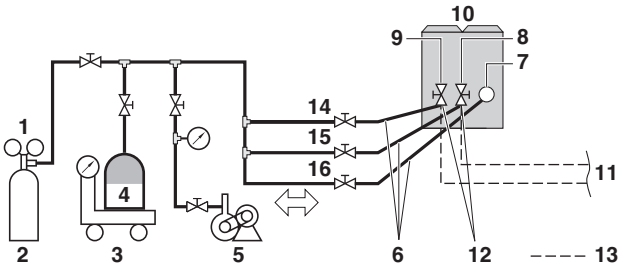

24

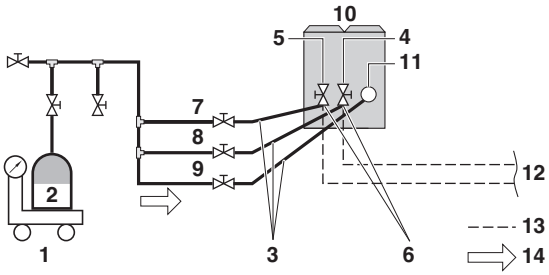

25

CE - DECLARATION-OF-CONFORMITY
CE - KONFORMITÄTSERKLÄRUNG
CE - DECLARATION-DE-CONFORMITE
CE - CONFORMITEITSVERKLARING
CE - DECLARACION-DE-CONFORMIDAD
CE - DICHIARAZIONE-DI-CONFORMITA
CE - ΔΗΛΩΣΗ ΣΥΜΜΟΡΦΩΣΗΣ
CE - DECLARAÇÃO-DE-CONFORMIDADE
CE - ЗАЯВЛЕНИЕ-О-СООТВЕТСТВИИ
CE - OPFYLDELSESERKLÆRING
CE - FÖRSÄKRAN-OM-ÖVERENSTÄMMELSE
CE - ERKLÆRING OM-SAMSVAR
CE - ILMOITUS-YHDENMUKAISUUDESTA
CE - PROHLÁŠENÍ-O-SHODĚ
CE - IZJAVA-O-USKLAĐENOSTI
CE - MEGFELELŐSÉGI-NYILATKOZAT
CE - DEKLARACJA-ZGODNOŚCI
CE - DECLARAŢIE-DE-CONFORMITATE
CE - IZJAVA O SKLADNOSTI
CE - VASTAVUSDEKLARATSIOON
CE - ДЕКЛАРАЦИЯ-ЗА-СЪОТВЕТСТВИЕ
CE - ATITIKTIES-DEKLARACIJA
CE - ATBILSTĪBAS-DEKLARĀCIJA
CE - VYHLÁSENIE-ZHODY
CE - UYUMLULUK-BİLDİRİSİ

Daikin Europe N.V.

01 (GB) declares under its sole responsibility that the air conditioning models to which this declaration relates:
02 (D) erklärt auf seine alleinige Verantwortung daß die Modelle der Klimageräte für die diese Erklärung bestimmt ist:
03 (F) déclare sous sa seule responsabilité que les appareils d'air conditionné visés par la présente déclaration:
04 (NL) verklaart hierbij op eigen exclusieve verantwoordelijkheid dat de airconditioning units waarop deze verklaring betrekking heeft:
05 (E) declara baja su única responsabilidad que los modelos de aire acondicionado a los cuales hace referencia la declaración:
06 (I) dichiara sotto sua responsabilità che i condizionatori modello a cui è riferita questa dichiarazione:
07 (GR) δηλώνει με αποκλειστική της ευθύνη ότι τα μοντέλα των κλιματιστικών συσκευών στα οποία αναφέρεται η παρούσα δήλωση:
08 (P) declara sob sua exclusiva responsabilidade que os modelos de ar condicionado a que esta declaração se refere:
09 (RUS) заявляет, исключительно под свою ответственность, что модели кондиционеров воздуха, к которым относится настоящее заявление:
10 (DK) erklærer under eneansvar, at klimaanlægmodellerne, som denne deklaration vedrører:
11 (S) deklarerar i egenskap av huvudansvarig, att luftkonditioneringsmodellerna som berörs av denna deklaration innebär att:
12 (N) erklærer et fullstendig ansvar for at de luftkondisjoneringsmodeller som berøres av denne deklarasjon innebærer at:
13 (FIN) ilmoittaa yksinomaan omalla vastuullaan, että tämän ilmoituksen tarkoittamat ilmastointilaitteiden mallit:
14 (CZ) prohlašuje ve své plné odpovědnosti, že modely klimatizace, k nimž se toto prohlášení vztahuje:
15 (HR) izjavljuje pod isključivo vlastitom odgovornošću da su modeli klima uređaja na koje se ova izjava odnosi:
16 (H) teljes felelőssége tudatában kijelenti, hogy a klímaberendezés modellek, melyekre e nyilatkozat vonatkozik:
17 (PL) deklaruje na własną i wyłączną odpowiedzialność, że modele klimatyzatorów, których dotyczy niniejsza deklaracja:
18 (RO) declară pe proprie răspundere că aparatele de aer condiţionat la care se referă această declaraţie:
19 (SLO) z vso odgovornostjo izjavlja, da so modeli klimatskih naprav, na katere se izjava nanaša:
20 (EST) kinnitab oma täielikul vastutusel, et käesoleva deklaratsiooni alla kuuluvad kliimaseadmete mudelid:
21 (BG) декларира на своя отговорност, че моделите климатична инсталация, за които се отнася тази декларация:
22 (LT) visiška savo atsakomybe skelbia, kad oro kondicionavimo prietaisų modeliai, kuriems yra taikoma ši deklaracija:
23 (LV) ar pilnu atbildību apliecina, ka tālák uzskaitīto modeļu gaisa kondicionētāji, uz kuriem attiecas šī deklarācija:
24 (SK) vyhlasuje na vlastnú zodpovednosť, že tieto klimatizačné modely, na ktoré sa vzťahuje toto vyhlásenie:
25 (TR) tamamen kendi sorumluluğunda olmak üzere bu bildirinin ilgili olduğu klima modellerinin aşağıdaki gibi olduğunu beyan eder:

RXYQ8P7W1BR1*, RXYQ10P7W1BR1*, RXYQ12P7W1BR1*,
RXYQ14P7W1BR1*, RXYQ16P7W1BR1*, RXYQ18P7W1BR1*,

*= , , 1, 2, 3, ..., 9

01 are in conformity with the following standard(s) or other normative document(s), provided that these are used in accordance with our instructions:
02 der/den folgenden Norm(en) oder einem anderen Normdokument oder -dokumenten entspricht/entsprechen, unter der Voraussetzung, daß sie gemäß unseren Anweisungen eingesetzt werden:
03 sont conformes à la/aux norme(s) ou autre(s) document(s) normatif(s), pour autant qu'ils soient utilisés conformément à nos instructions:
04 conform de volgende norm(en) of één of meer andere bindende documenten zijn, op voorwaarde dat ze worden gebruikt overeenkomstig onze instructies:
05 están en conformidad con la(s) siguiente(s) norma(s) u otro(s) documento(s) normativo(s), siempre que sean utilizados de acuerdo con nuestras instrucciones:
06 sono conformi al(i) seguente(i) standard(s) o altro(i) documento(i) a carattere normativo, a patto che vengano usati in conformità alle nostre istruzioni:
07 είναι σύμφωνα με το(α) ακόλουθο(α) πρότυπο(α) ή άλλο έγγραφο(α) κανονισμών, υπό την προϋπόθεση ότι χρησιμοποιούνται σύμφωνα με τις οδηγίες μας:
08 estão em conformidade com a(s) seguinte(s) norma(s) ou outro(s) documento(s) normativo(s), desde que estes sejam utilizados de acordo com as nossas instruções:
09 соответствуют следующим стандартам или другим нормативным документам, при условии их использования согласно нашим инструкциям:
10 overholder følgende standard(er) eller andet/andre retningsgivende dokument(er), forudsat at disse anvendes i henhold til vore instrukser:
11 respektive utrustning är utförd i överensstämmelse med och följer följande standard(er) eller andra normgivande dokument, under förutsättning att användning sker i överensstämmelse med våra instruktioner:
12 respektive utstyr er i overensstemmelse med følgende standard(er) eller andre normgivende dokument(er), under forutsetning av at disse brukes i henhold til våre instrukser:
13 vastaavat seuraavien standardien ja muiden ohjeellisten dokumettien vaatimuksia edellyttäen, että niitä käytetään ohjeidemme mukaisesti:
14 za předpokladu, že jsou využívány v souladu s našimi pokyny, odpovídají následujícím normám nebo normativním dokumentům:
15 u skladu sa slijedećim standardom(ima) ili drugim normativnim dokumentom(ima), uz uvjet da se oni koriste u skladu s našim uputama:
16 megfelelnek az alábbi szabvány(ok)nak vagy egyéb irányadó dokumentum(ok)nak, ha azokat előírás szerint használják:
17 spełniają wymogi następujących norm i innych dokumentów normalizacyjnych, pod warunkiem że używane są zgodnie z naszymi instrukcjami:
18 sunt în conformitate cu următorul (următoarele) standard(e) sau alt(e) document(e) normativ(e), cu condiţia ca acestea să fie utilizate în conformitate cu instrucţiunile noastre:
19 skladni z naslednjimi standardi in drugimi normativi, pod pogojem, da se uporabljajo v skladu z našimi navodili:
20 on vastavuses järgmis(t)e standardi(te)ga või teiste normatiivsete dokumentidega, kui neid kasutatakse vastavalt meie juhenditele:
21 съответстват на следните стандарти или други нормативни документи, при условие, че се използват съгласно нашите инструкции:
22 atitinka žemiau nurodytus standartus ir (arba) kitus norminius dokumentus su sąlyga, kad yra naudojami pagal mūsų nurodymus:
23 tad, ja lietoti atbilstoši ražotāja norādījumiem, atbilst sekojošiem standartiem un citiem normatīviem dokumentiem:
24 sú v zhode s nasledovnou(ými) normou(ami) alebo iným(i) normatívnym(i) dokumentom(ami), za predpokladu, že sa používajú v súlade s našim návodom:
25 ürünün, talimatlarımıza göre kullanılması koşuluyla aşağıdaki standartlar ve norm belirten belgelerle uyumludur:

EN60335-2-40,

01 following the provisions of:
02 gemäß den Vorschriften der:
03 conformément aux stipulations des:
04 overeenkomstig de bepalingen van:
05 siguiendo las disposiciones de:
06 secondo le prescrizioni per:
07 με τήρηση των διατάξεων των:
08 de acordo com o previsto em:
09 в соответствии с положениями:
10 under iagttagelse af bestemmelserne i:
11 enligt villkoren i:
12 gitt i henhold til bestemmelsene i:
13 noudattaen määräyksiä:
14 za dodržení ustanovení předpisu:
15 prema odredbama:
16 követi a(z):
17 zgodnie z postanowieniami Dyrektyw:
18 în urma prevederilor:
19 ob upoštevanju določb:
20 vastavalt nõuetele:
21 следвайки клаузите на:
22 laikantis nuostatų, pateikiamų:
23 ievērojot prasības, kas noteiktas:
24 održavajúc ustanovenia:
25 bunun koşullanna uygun olarak:

Low Voltage 2006/95/EC
Machinery 98/37/EC
Electromagnetic Compatibility 2004/108/EC *
Pressure Equipment 97/23/EC **

01 Directives, as amended.
02 Direktiven, gemäß Änderung.
03 Directives, telles que modifiées.
04 Richtlijnen, zoals geamendeerd.
05 Directivas, según lo enmendado.
06 Direttive, come da modifica.
07 Οδηγιών, όπως έχουν τροποποιηθεί.
08 Directivas, conforme alteração em.
09 Директив со всеми поправками.
10 Direktiver, med senere ændringer.
11 Direktiv, med företagna ändringar.
12 Direktiver, med foretatte endringer.
13 Direktiivejä, sellaisina kuin ne ovat muutettuina.
14 v platném znění.
15 Smjernice, kako je izmijenjeno.
16 irányelv(ek) és módosításaik rendelkezéseit.
17 z późniejszymi poprawkami.
18 Directivelor, cu amendamentele respective.
19 Direktive z vsemi spremembami.
20 Direktiivid koos muudatustega.
21 Директиви, с техните изменения.
22 Direktyvose su papildymais.
23 Direktīvās un to papildinājumos.
24 Smernice, v platnom znení.
25 Değiştirilmiş halleriyle Yönetmelikler.

01 *as set out in **<A>** and judged positively by **<B>** according to the **Certificate <C>**.
** as set out in the Technical Construction File **<D>** and judged positively by **<E>** (Applied module **<F>**). **<G>**. Risk category **<H>**. Also refer to next page.
02 *wie in der **<A>** aufgeführt und von **<B>** positiv beurteilt gemäß **Zertifikat <C>**.
** wie in der Technischen Konstruktionsakte **<D>** aufgeführt und von **<E>** (Angewandtes Modul **<F>**) positiv ausgezeichnet gemäß. **<G>**. Risikoart **<H>**. Siehe auch nächste Seite.
03 *tel que défini dans **<A>** et évalué positivement par **<B>** conformément au **Certificat <C>**.
** tel que stipulé dans le Fichier de Construction Technique **<D>** et jugé positivement par **<E>** (Module appliqué **<F>**). **<G>**. Catégorie de risque **<H>**. Se reporter également à la page suivante.
04 *zoals vermeld in **<A>** en positief beoordeeld door **<B>** overeenkomstig **Certificaat <C>**.
** zoals vermeld in het Technisch Constructiedossier **<D>** en in orde bevonden door **<E>** (Toegepaste module **<F>**). **<G>**. Risicocategorie **<H>**. Zie ook de volgende pagina.
05 *como se establece en **<A>** y es valorado positivamente por **<B>** de acuerdo con el **Certificado <C>**.
** tal como se expone en el Archivo de Construcción Técnica **<D>** y juzgado positivamente por **<E>** (Modulo aplicado **<F>**). **<G>**. Categoría de riesgo **<H>**. Consulte también la siguiente página.
06 *delineato nel **<A>** e giudicato positivamente da **<B>** secondo il **Certificato <C>**.
** delineato nel File Tecnico di Costruzione **<D>** e giudicato positivamente da **<E>** (Modulo **<F>** applicato). **<G>**. Categoria di rischio **<H>**. Fare riferimento anche alla pagina successiva.
07 *όπως καθορίζεται στο **<A>** και κρίνεται θετικά από το **<B>** σύμφωνα με το **Πιστοποιητικό <C>**.
** όπως προσδιορίζεται στο Αρχείο Τεχνικής Κατασκευής **<D>** και κρίνεται θετικά από το **<E>** (Χρησιμοποιούμενη υπομονάδα **<F>**). **<G>**. Κατηγορία επικινδυνότητας **<H>**. Ανατρέξτε επίσης στην επόμενη σελίδα.
08 *tal como estabelecido em **<A>** e com o parecer positivo de **<B>** de acordo com o **Certificado <C>**.
** tal como estabelecido no Ficheiro Técnico de Construção **<D>** e com o parecer positivo de **<E>** (Módulo aplicado **<F>**). **<G>**. Categoria de risco **<H>**. Consultar também a página seguinte.
09 *как указано в **<A>** и в соответствии с положительным решением **<B>** согласно **Свидетельству <C>**.
** как указано в Досье технического толкования **<D>** и в соответствии с положительным решением **<E>** (Прикладной модуль **<F>**). **<G>**. Категория риска **<H>**. Также смотрите следующую страницу.
10 *som anført i **<A>** og positivt vurderet af **<B>** i henhold til **Certifikat <C>**.
** som anført i den Tekniske Konstruktionsfil **<D>** og positivt vurderet af **<E>** (Anvendt modul **<F>**). **<G>**. Risikoklasse **<H>**. Se også næste side.
11 *enligt **<A>** och godkänts av **<B>** enligt **Certifikatet <C>**.
** i i enlighet med den Tekniska Konstruktionsfilen **<D>** som positivt intygats av **<E>** (Fastsatt modul **<F>**). **<G>**. Riskkategori **<H>**. Se även nästa sida.
12 *som det fremkommer i **<A>** og gjennom positiv bedømmelse av **<B>** ifølge **Sertifikat <C>**.
** som det fremkommer i den Tekniske Konstruksjonsfilen **<D>** og gjennom positiv bedømmelse av **<E>** (Anvendt modul **<F>**). **<G>**. Risikokategori **<H>**. Se også neste side.
13 *jotka on esitetty asiakirjassa **<A>** ja jotka **<B>** on hyväksynyt **Sertifikaatin <C>** mukaisesti.
** jotka on esitetty Teknisessä Asiakirjassa **<D>** ja jotka **<E>** on hyväksynyt (Sovellettu moduli **<F>**). **<G>**. Vaaraluokka **<H>**. Katso myös seuraava sivu.
14 *jak bylo uvedeno v **<A>** a pozitivně zjištěno **<B>** v souladu s **osvědčením <C>**.
** jak bylo uvedeno v souboru technické konstrukce **<D>** a pozitivně zjištěno **<E>** (použitý modul **<F>**). **<G>**. Kategorie rizik **<H>**. Viz také následující strana.
15 *kako je izloženo u **<A>** i pozitivno ocijenjeno od strane **<B>** prema **Certifikatu <C>**.
** kako je izloženo u Datoteci o tehničkoj konstrukciji **<D>** i pozitivno ocijenjeno od strane **<E>** (Primijenjen modul **<F>**). **<G>**. Kategorija opasnosti **<H>**. Također pogledajte na slijedećoj stranici.
16 *a(z) **<A>** alapján, a(z) **<B>** igazolta a megfelelést, a(z) **<C> tanúsítvány** szerint.
** a(z) **<D>** műszaki konstrukciós dokumentáció alapján, a(z) **<E>** igazolta a megfelelést (alkalmazott modul: **<F>**). **<G>**. Veszélyességi kategória **<H>**. Lásd még a következő oldalon.
17 *zgodnie z dokumentacją **<A>**, pozytywną opinią **<B>** i **Świadectwem <C>**.
** zgodnie z archiwalną dokumentacją konstrukcyjną **<D>** i pozytywną opinią **<E>** (Zastosowany moduł **<F>**). **<G>**. Kategoria zagrożenia **<H>**. Patrz także następna strona.
18 *aşa cum este stabilit în **<A>** şi apreciat pozitiv de **<B>** în conformitate cu **Certificatul <C>**.
** conform celor stabilite în Dosarul tehnic de construcţie **<D>** şi apreciate pozitiv de **<E>** (Modul aplicat **<F>**). **<G>**. Categorie de risc **<H>**. Consultaţi de asemenea pagina următoare.
19 *kot je določeno v **<A>** in odobreno s strani **<B>** v skladu s **certifikatom <C>**.
** kot je določeno v tehnični mapi **<D>** in odobreno s strani **<E>** (Uporabljen modul **<F>**). **<G>**. Kategorija tveganja **<H>**. Glejte tudi na naslednji strani.
20 *nagu on näidatud dokumendis **<A>** ja heaks kiidetud **<B>** järgi vastavalt **sertifikaadile <C>**.
** nagu on näidatud tehnilises dokumentatsioonis **<D>** ja heaks kiidetud **<E>** järgi (lisamoodul **<F>**). **<G>**. Riskikategooria **<H>**. Vaadake ka järgmist lehekülge.
21 *както е изложено в **<A>** и оценено положително от **<B>** съгласно **Сертификата <C>**.
** както е заложено в Акта за техническа конструкция **<D>** и оценено положително от **<E>** (Приложен модул **<F>**). **<G>**. Категория риск **<H>**. Вижте също на следващата страница.
22 *kaip nustatyta **<A>** ir kaip teigiamai nuspręsta **<B>** pagal **Sertifikatą <C>**.
** kaip nurodyta Techninėje konstrukcijos byloje **<D>** ir patvirtinta **<E>** (taikomas modulis **<F>**). **<G>**. Rizikos kategorija **<H>**. Taip pat žiūrėkite ir kitą puslapį.
23 *kā norādīts **<A>** un atbilstoši **<B>** pozitīvajam vērtējumam saskaņā ar **sertifikātu <C>**.
** kā noteikts tehniskajā dokumentācijā **<D>**, atbilstoši **<E>** pozitīvajam lēmumam (piekritīgā sadaļa: **<F>**). **<G>**. Riska kategorija **<H>**. Skat. arī nākošo lappusi.
24 *ako bolo uvedené v **<A>** a pozitívne zistené **<B>** v súlade s **osvedčením <C>**.
** ako je to stanovené v Súbore technickej konštrukcie **<D>** a kladne posúdené **<E>** (Aplikovaný modul **<F>**). **<G>**. Kategória nebezpečia **<H>**. Viď tiež nasledovnú stranu.
25 *<A>'da belirtildiği gibi ve **<C> Sertifikasına** göre **<B>** tarafından olumlu olarak değerlendirildiği gibi.
** **<D>** Teknik Yapı Dosyasında belirtildiği gibi ve **<E>** tarafından olumlu olarak (Uygulanan modül **<F>**) değerlendirilmiştir. **<G>**. Risk kategorisi **<H>**. Ayrıca bir sonraki sayfaya bakın.

<A>	DAIKIN.TCF.024C12/01-2008
<B>	TNO
<C>	0510260101
<D>	Daikin.TCFP.001
<E>	AIB Vinçotte (NB0026)
<F>	D1
<G>	–
<H>	II

2PW40200-6C

DAIKIN

Jiro Tomita
Director Quality Assurance
Ostend, 1st of February 2008

DAIKIN EUROPE N.V.
Zandvoordestraat 300, B-8400 Oostende, Belgium

CE - DECLARATION-OF-CONFORMITY
CE - KONFORMITÄTSERKLÄRUNG
CE - DECLARATION-DE-CONFORMITE
CE - CONFORMITEITSVERKLARING

CE - DECLARACION-DE-CONFORMIDAD
CE - DICHIARAZIONE-DI-CONFORMITA
CE - ΔΗΛΩΣΗ ΣΥΜΜΟΡΦΩΣΗΣ

CE - DECLARAÇÃO-DE-CONFORMIDADE
CE - ЗАЯВЛЕНИЕ-О-СООТВЕТСТВИИ
CE - OPFYLDELSESERKLÆRING
CE - FÖRSÄKRAN-OM-ÖVERENSTÄMMELSE

CE - ERKLÆRING OM-SAMSVAR
CE - ILMOITUS-YHDENMUKAISUUDESTA
CE - PROHLÁŠENÍ-O-SHODĚ

CE - IZJAVA-O-USKLAĐENOSTI
CE - MEGFELELŐSÉGI-NYILATKOZAT
CE - DEKLARACJA-ZGODNOŚCI
CE - DECLARAŢIE-DE-CONFORMITATE

CE - IZJAVA O SKLADNOSTI
CE - VASTAVUSDEKLARATSIOON
CE - ДЕКЛАРАЦИЯ-ЗА-СЪОТВЕТСТВИЕ

CE - ATITIKTIES-DEKLARACIJA
CE - ATBILSTĪBAS-DEKLARĀCIJA
CE - VYHLÁSENIE-ZHODY
CE - UYUMLULUK-BİLDİRİSİ

01 (GB) continuation of previous page:
02 (D) Fortsetzung der vorherigen Seite:
03 (F) suite de la page précédente:
04 (NL) vervolg van vorige pagina:
05 (E) continuación de la página anterior:
06 (I) continua dalla pagina precedente:
07 (GR) συνέχεια από την προηγούμενη σελίδα:
08 (P) continuação da página anterior:
09 (RUS) продолжение предыдущей страницы:
10 (DK) fortsat fra forrige side:
11 (S) fortsättning från föregående sida:
12 (N) fortsettelse fra forrige side:
13 (FIN) jatkoa edelliseltä sivulta:
14 (CZ) pokračování z předchozí strany:
15 (HR) nastavak s prethodne stranice:
16 (H) folytatás az előző oldalról:
17 (PL) ciąg dalszy z poprzedniej strony:
18 (RO) continuarea paginii anterioare:
19 (SLO) nadaljevanje s prejšnje strani:
20 (EST) eelmise leheküljе järg:
21 (BG) продължение от предходната страница:
22 (LT) ankstesnio puslapio tęsinys:
23 (LV) iepriekšējās lappuses turpinājums:
24 (SK) pokračovanie z predchádzajúcej strany:
25 (TR) önceki sayfadan devam

01 Design Specifications of the models to which this declaration relates:
02 Konstruktionsdaten der Modelle auf die sich diese Erklärung bezieht:
03 Spécifications de conception des modèles auxquels se rapporte cette déclaration:
04 Ontwerpspecificaties van de modellen waarop deze verklaring betrekking heeft:
05 Especificaciones de diseño de los modelos a los cuales hace referencia esta declaración:
06 Specifiche di progetto dei modelli cui fa riferimento la presente dichiarazione:
07 Προδιαγραφές Σχεδιασμού των μοντέλων με τα οποία σχετίζεται η δήλωση:
08 Especificações de projecto dos modelos a que se aplica esta declaração:
09 Проектные характеристики моделей, к которым относится настоящее заявление:
10 Typespecifikationer for de modeller, som denne erklæring vedrører:
11 Designspecifikationer för de modeller som denna deklaration gäller:
12 Konstruksjonsspesifikasjoner for de modeller som berøres av denne deklarasjonen:
13 Tätä ilmoitusta koskevien mallien rakennemäärittely:
14 Specifikace designu modelů, ke kterým se vztahuje toto prohlášení:
15 Specifikacije dizajna za modele na koje se ova izjava odnosi:
16 A jelen nyilatkozat tárgyát képező modellek tervezési jellemzői:
17 Specyfikacje konstrukcyjne modeli, których dotyczy deklaracja:
18 Specificaţiile de proiectare ale modelelor la care se referă această declaraţie:
19 Specifikacije tehničnega načrta za modele, na katere se nanaša ta deklaracija:
20 Deklaratsiooni alla kuuluvate mudelite disainispetsifikatsioonid:
21 Проектни спецификации на моделите, за които се отнася декларацията:
22 Konstrukcinės specifikacijos modelių, kurie susiję su šia deklaracija:
23 To modeļu dizaina specifikācijas, uz kurām attiecas šī deklarācija:
24 Konštrukčné špecifikácie modelu, ktorého sa týka toto vyhlásenie:
25 Bu bildirinin ilgili olduğu modellerin Tasarım Özellikleri:

01 • Maximum allowable pressure (PS): **<K>** (bar)
• Minimum/maximum allowable temperature (TS*):
* TSmin: Minimum temperature at low pressure side: **<L>** (°C)
* TSmax: Saturated temperature corresponding with the maximum allowable pressure (PS): **<M>** (°C)
• Refrigerant: **<N>**
• Setting of pressure safety device: **<P>** (bar)
• Manufacturing number and manufacturing year: refer to model nameplate

02 • Maximal zulässiger Druck (PS): **<K>** (Bar)
• Minimal/maximal zulässige Temperatur (TS*):
* TSmin: Mindesttemperatur auf der Niederdruckseite: **<L>** (°C)
* TSmax: Sättigungstemperatur die dem maximal zulässigen Druck (PS) entspricht: **<M>** (°C)
• Kältemittel: **<N>**
• Einstellung der Druck-Schutzvorrichtung: **<P>** (Bar)
• Herstellungsnummer und Herstellungsjahr: siehe Typenschild des Modells

03 • Pression maximale admise (PS): **<K>** (bar)
• Température minimum/maximum admise (TS*):
* TSmin: température minimum côté basse pression: **<L>** (°C)
* TSmax: température saturée correspondant à la pression maximale admise: **<M>** (°C)
• Réfrigérant: **<N>**
• Réglage du dispositif de sécurité de pression: **<P>** (bar)
• Numéro de fabrication et année de fabrication: se reporter à la plaquette signalétique du modèle

04 • Maximaal toelaatbare druk (PS): **<K>** (bar)
• Minimaal/maximaal toelaatbare temperatuur (TS*):
* TSmin: Minimumtemperatuur aan lagedrukzijde: **<L>** (°C)
* TSmax: Verzadigde temperatuur die overeenstemt met de maximaal toelaatbare druk (PS): **<M>** (°C)
• Koelmiddel: **<N>**
• Instelling van drukbeveiliging: **<P>** (bar)
• Fabricagenummer en fabricagejaar: zie naamplaat model

05 • Presión máxima admisible (PS): **<K>** (bar)
• Temperatura mínima/máxima admisible (TS*):
* TSmin: Temperatura mínima en el lado de baja presión: **<L>** (°C)
* TSmax: Temperatura saturada correspondiente a la presión máxima admisible: **<M>** (°C)
• Refrigerante: **<N>**
• Ajuste del presostato de seguridad: **<P>** (bar)
• Número de fabricación y año de fabricación: consulte la placa de especificaciones técnicas del modelo

06 • Pressione massima consentita (PS): **<K>** (bar)
• Temperatura minima/massima consentita (TS*):
* TSmin: temperatura minima nel lato di bassa pressione: **<L>** (°C)
* TSmax: temperatura satura corrispondente alla pressione massima consentita (PS): **<M>** (°C)
• Refrigerante: **<N>**
• Impostazione del dispositivo di controllo della pressione: **<P>** (bar)
• Numero di serie e anno di produzione: fare riferimento alla targhetta del modello

07 • Μέγιστη επιτρεπόμενη πίεση (PS): **<K>** (bar)
• Ελάχιστη/μέγιστη επιτρεπόμενη θερμοκρασία (TS*):
* TSmin: Ελάχιστη θερμοκρασία για την πλευρά χαμηλής πίεσης: **<L>** (°C)
* TSmax: Κορεσμένη θερμοκρασία που αντιστοιχεί με τη μέγιστη επιτρεπόμενη πίεση (PS): **<M>** (°C)
• Ψυκτικό: **<N>**
• Ρύθμιση της διάταξης ασφάλειας πίεσης: **<P>** (bar)
• Αριθμός κατασκευής και έτος κατασκευής: ανατρέξτε στην πινακίδα αναγνώρισης του μοντέλου

08 • Pressão máxima permitida (PS): **<K>** (bar)
• Temperaturas mínima e máxima permitidas (TS*):
* TSmin: Temperatura mínima em baixa pressão: **<L>** (°C)
* TSmax: Temperatura de saturação correspondente à pressão máxima permitida (PS): **<M>** (°C)
• Refrigerante: **<N>**
• Regulação do dispositivo de segurança da pressão: **<P>** (bar)
• Número e ano de fabrico: consultar a placa de especificações da unidade

09 • Максимально допустимое давление (PS): **<K>** (бар)
• Минимально/максимально допустимая температура (TS*):
* TSmin: Минимальная температура на стороне низкого давления: **<L>** (°C)
* TSmax: Температура кипения, соответствующая максимально допустимому давлению (PS): **<M>** (°C)
• Хладагент: **<N>**
• Настройка устройства защиты по давлению: **<P>** (бар)
• Заводской номер и год изготовления: смотрите паспортную табличку модели

10 • Maks. tilladt tryk (PS): **<K>** (bar)
• Min./maks. tilladte temperatur (TS*):
* TSmin: Min. temperatur på lavtrykssiden: **<L>** (°C)
* TSmax: Mættet temperatur svarende til maks. tilladte tryk (PS): **<M>** (°C)
• Kølemiddel: **<N>**
• Indstilling af tryksikringsudstyr: **<P>** (bar)
• Produktionsnummer og fremstillingsår: se modellens fabriksskilt

11 • Maximalt tilladet tryck (PS): **<K>** (bar)
• Min/max tilladen temperatur (TS*):
* TSmin: Minimumtemperatur på lågtryckssidan: **<L>** (°C)
* TSmax: Mättnadstemperatur som motsvarar maximalt tillåtet tryck (PS): **<M>** (°C)
• Köldmedel: **<N>**
• Inställning för trycksäkerhetsenhet: **<P>** (bar)
• Tillverkningsnummer och tillverkningsår: se modellens namnplåt

12 • Maksimalt tillatt trykk (PS): **<K>** (bar)
• Minimalt/maksimalt tillatt temperatur (TS*):
* TSmin: Minimumstemperatur på lavtrykkssiden: **<L>** (°C)
* TSmax: Metningstemperatur i samsvar med maksimalt tillatt trykk (PS): **<M>** (°C)
• Kjølemedium: **<N>**
• Innstilling av sikkerhetsanordning for trykk: **<P>** (bar)
• Produksjonsnummer og produksjonsår: se modellens merkeplate

13 • Suurin sallittu paine (PS): **<K>** (bar)
• Pienin/suurin sallittu lämpötila (TS*):
* TSmin: Alhaisin matalapainepuolen lämpötila: **<L>** (°C)
* TSmax: Suurinta sallittua painetta (PS) vastaava kyllästyslämpötila: **<M>** (°C)
• Kylmäaine: **<N>**
• Varmuuspainelaitteen asetus: **<P>** (bar)
• Valmistusnumero ja valmistusvuosi: katso mallin nimikilpi

14 • Maximální přípustný tlak (PS): **<K>** (bar)
• Minimální/maximální přípustná teplota (TS*):
* TSmin: Minimální teplota na nízkotlaké straně: **<L>** (°C)
* TSmax: Saturovaná teplota odpovídající maximálnímu přípustnému tlaku (PS): **<M>** (°C)
• Chladivo: **<N>**
• Nastavení bezpečnostního tlakového zařízení: **<P>** (bar)
• Výrobní číslo a rok výroby: viz typový štítek modelu

15 • Najveći dopušten tlak (PS): **<K>** (bar)
• Najniža/najviša dopuštena temperatura (TS*):
* TSmin: Najniža temperatura u području niskog tlaka: **<L>** (°C)
* TSmax: Standardna temperatura koja odgovara najvećem dopuštenom tlaku (PS): **<M>** (°C)
• Rashladno sredstvo: **<N>**
• Postavke sigurnosne naprave za tlak: **<P>** (bar)
• Proizvodni broj i godina proizvodnje: pogledajte natpisnu pločicu modela

16 • Legnagyobb megengedhető nyomás (PS): **<K>** (bar)
• Legkisebb/legnagyobb megengedhető hőmérséklet (TS*):
* TSmin: Legkisebb megengedhető hőmérséklet a kis nyomású oldalon: **<L>** (°C)
* TSmax: A legnagyobb megengedhető nyomásnak (PS) megfelelő telítettségi hőmérséklet (PS): **<M>** (°C)
• Hűtőközeg: **<N>**
• A túlnyomás-kapcsoló beállítása: **<P>** (bar)
• Gyártási szám és gyártási év: lásd a berendezés adattábláján

17 • Maksymalne dopuszczalne ciśnienie (PS): **<K>** (bar)
• Minimalna/maksymalna dopuszczalna temperatura (TS*):
* TSmin: Minimalna temperatura po stronie niskociśnieniowej: **<L>** (°C)
* TSmax: Temperatura nasycenia odpowiadająca maksymalnemu dopuszczalnemu ciśnieniu (PS): **<M>** (°C)
• Czynnik chłodniczy: **<N>**
• Nastawa ciśnieniowego urządzenia bezpieczeństwa: **<P>** (bar)
• Numer fabryczny oraz rok produkcji: patrz tabliczka znamionowa modelu

18 • Presiune maximă admisibilă (PS): **<K>** (bar)
• Temperatură minimă/maximă admisibilă (TS*):
* TSmin: Temperatură minimă pe partea de presiune joasă: **<L>** (°C)
* TSmax: Temperatura de saturaţie corespunzând presiunii maxime admisibile (PS): **<M>** (°C)
• Agent frigorific: **<N>**
• Reglarea dispozitivului de siguranţă pentru presiune: **<P>** (bar)
• Numărul de fabricaţie şi anul de fabricaţie: consultaţi placa de identificare a modelului

19 • Maksimalni dovoljeni tlak (PS): **<K>** (bar)
• Minimalna/maksimalna dovoljena temperatura (TS*):
* TSmin: Minimalna temperatura na nizkotlačni strani: **<L>** (°C)
* TSmax: Nasičena temperatura, ki ustreza maksimalnemu dovoljenemu tlaku (PS): **<M>** (°C)
• Hladivo: **<N>**
• Nastavljanje varnostne naprave za tlak: **<P>** (bar)
• Tovarniška številka in leto proizvodnje: poglejte natpisna ploščico

20 • Maksimaalne lubatud surve (PS): **<K>** (bar)
• Minimaalne/maksimaalne lubatud temperatuur (TS*):
* TSmin: Minimaalne temperatuur madalsurve küljel: **<L>** (°C)
* TSmax: Maksimaalsele lubatud survele (PS) vastav küllastunud temperatuur (PS): **<M>** (°C)
• Jahutusaine: **<N>**
• Surve turvaseadme seadistus: **<P>** (bar)
• Tootmisnumber ja tootmisaasta: vaadake mudeli andmeplaati

21 • Максимално допустимо налягане (PS): **<K>** (bar)
• Минимално/максимално допустима температура (TS*):
* TSmin: Минимална температура от страната на ниското налягане: **<L>** (°C)
* TSmax: Температура на насищане, съответстваща на максимално допустимото налягане (PS): **<M>** (°C)
• Охладител: **<N>**
• Настройка на предпазното устройство за налягане: **<P>** (bar)
• Фабричен номер и година на производство: вижте табелката на модела

22 • Maksimalus leistinas slėgis (PS): **<K>** (bar)
• Minimali/maksimali leistina temperatūra (TS*):
* TSmin: Minimali temperatūra žemo slėgio pusėje: **<L>** (°C)
* TSmax: Prisotinta temperatūra, atitinkamti maksimalų leistiną slėgį (PS): **<M>** (°C)
• Šaldymo skystis: **<N>**
• Apsaugino slėgio prietaiso nustatymas: **<P>** (bar)
• Gaminio numeris ir pagaminimo metai: žiūrėkite modelio pavadinimo plokštelę

23 • Maksimālais pieļaujamais spiediens (PS): **<K>** (bar)
• Minimālā/maksimālā pieļaujamā temperatūra (TS*):
* TSmin: Minimālā temperatūra zemā spiediena pusē: **<L>** (°C)
* TSmax: Piesātinātā temperatūra saskaņā ar maksimālo pieļaujamo spiedienu (PS): **<M>** (°C)
• Dzesinātājs: **<N>**
• Spiediena drošības ierīces iestatīšana: **<P>** (bar)
• Izgatavošanas numurs un izgatavošanas gads: skat. modeļa izgatavotājuzņēmuma plāksnītie

24 • Maximálny povolený tlak (PS): **<K>** (bar)
• Minimálna/maximálna povolená teplota (TS*):
* TSmin: Minimálna teplota na nízkotlakovej strane: **<L>** (°C)
* TSmax: Nasýtená teplota korešpondujúca s maximálnym povoleným tlakom (PS): **<M>** (°C)
• Chladivo: **<N>**
• Nastavenie tlakového poistného zariadenia: **<P>** (bar)
• Výrobné číslo a rok výroby: nájdete na výrobnom štítku modelu

25 • İzin verilen maksimum basınç (PS): **<K>** (bar)
• İzin verilen minimum/maksimum sıcaklık (TS*):
* TSmin: Düşük basınç tarafındaki minimum sıcaklık: **<L>** (°C)
* TSmax: İzin verilen maksimum basınca (PS) karşı gelen doyma sıcaklığı (PS): **<M>** (°C)
• Soğutucu: **<N>**
• Basınç emniyet düzeninin ayarı: **<P>** (bar)
• İmalat numarası ve imalat yılı: modelin ünite plakasına bakın

<K>	**PS**	**40**	**bar**
<L>	**TSmin**	**–30**	**°C**
<M>	**TSmax**	**63**	**°C**
<N>		**R410A**	
<P>		**40**	**bar**

01 Name and address of the Notified body that judged positively on compliance with the Pressure Equipment Directive: **<Q>**
02 Name und Adresse der benannten Stelle, die positiv unter Einhaltung der Druckanlagen-Richtlinie urteilte: **<Q>**
03 Nom et adresse de l'organisme notifié qui a évalué positivement la conformité à la directive sur l'équipement de pression: **<Q>**
04 Naam en adres van de aangemelde instantie die positief geoordeeld heeft over de conformiteit met de Richtlijn Drukapparatuur: **<Q>**
05 Nombre y dirección del Organismo Notificado que juzgó positivamente el cumplimiento con la Directiva en materia de Equipos de Presión: **<Q>**
06 Nome e indirizzo dell'Ente riconosciuto che ha riscontrato la conformità alla Direttiva sulle apparecchiature a pressione: **<Q>**
07 Ονομα και διεύθυνση του Κοινοποιημένου οργανισμού που απεφάνθη θετικά για τη συμμόρφωση προς την Οδηγία Εξοπλισμών υπό Πίεση: **<Q>**
08 Nome e morada do organismo notificado, que avaliou favoravelmente a conformidade com a directiva sobre equipamentos pressurizados: **<Q>**
09 Название и адрес органа технической экспертизы, принявшего положительное решение о соответствии Директиве об оборудовании под давлением: **<Q>**
10 Navn og adresse på bemyndiget organ, der har foretaget en positiv bedømmelse af, at udstyret lever op til kravene i PED (Direktiv for Trykbærende Udstyr): **<Q>**
11 Namn och adress för det anmälda organ som godkänt uppfyllandet av tryckutrustningsdirektivet: **<Q>**
12 Navn på og adresse til det autoriserte organet som positivt bedømte samsvar med direktivet for trykkutstyr (Pressure Equipment Directive): **<Q>**
13 Sen ilmoitetun elimen nimi ja osoite, joka teki myönteisen päätöksen painelaitedirektiivin noudattamisesta: **<Q>**
14 Název a adresa informovaného orgánu, který vydal pozitivní posouzení shody se směrnicí o tlakových zařízeních: **<Q>**
15 Naziv i adresa prijavljenog tijela koje je donijelo pozitivnu prosudbu o usklađenosti sa Smjernicom za tlačnu opremu: **<Q>**
16 A nyomástartó berendezésekre vonatkozó irányelvnek való megfelelŒséget igazoló bejelentett szervezet neve és címe: **<Q>**
17 Nazwa i adres Jednostki notyfikowanej, która wydała pozytywną opinię dotyczącą spełnienia wymogów Dyrektywy dot. Urządzeń Ciśnieniowych: **<Q>**
18 Denumirea şi adresa organismului notificat care a apreciat pozitiv conformarea cu Directiva privind echipamentele sub presiune: **<Q>**
19 Ime in naslov organa za ugotavljanje skladnosti, ki je pozitivno ocenil združljivost z Direktivo o tlačni opremi: **<Q>**
20 Teavitatud organi, mis hindas Surveseadmete Direktiiviga ühilduvust positiivselt, nimi ja aadress: **<Q>**
21 Наименование и адрес на упълномощения орган, който се е произнесъл положително относно съвместимостта с Директивата за оборудване под налягане: **<Q>**
22 Atsakingos institucijos, kuri davė teigiamą sprendimą pagal slėginės įrangos direktyvą pavadinimas ir adresas: **<Q>**
23 Sertifikācijas institūcijas, kura ir devusi pozitīvu slēdzienu par atbilstību Spiediena iekārtu Direktīvai, nosaukums un adrese: **<Q>**
24 Názov a adresa certifikačného úradu, ktorý kladne posúdil zhodu so smernicou pre tlakové zariadenia: **<Q>**
25 Basınçlı Teçhizat Direktifine uygunluk hususunda olumlu olarak değerlendirilen Onaylanmış kuruluşun adı ve adresi: **<Q>**

<Q> AIB VINÇOTTE INTERNATIONAL
Avenue du Roi 157
B-1190 Brussels, Belgium

2PW40200-6C

DAIKIN

Jiro Tomita
Director Quality Assurance
Ostend, 1st of February 2008

DAIKIN EUROPE N.V.
Zandvoordestraat 300, B-8400 Oostende, Belgium

CONTENTS

Page

1. Introduction....1
1.1. Combination....2
1.2. Standard supplied accessories....2
1.3. Optional accessories....2
1.4. Technical and Electrical specifications....2
1.5. System layout....2
2. Main components....2
3. Selection of location....3
4. Inspecting and handling the unit....4
5. Unpacking and placing the unit....4
6. Refrigerant piping....4
6.1. Installation tools....4
6.2. Selection of piping material....5
6.3. Pipe connection....5
6.4. Connecting the refrigerant piping....5
6.5. Protection against contamination when installing pipes....7
6.6. Example of connection....8
7. Leak test and vacuum drying....10
8. Field wiring....10
8.1. Internal wiring – Parts table....11
8.2. Optional parts cool/heat selector....11
8.3. Power circuit and cable requirements....12
8.4. General cautions....12
8.5. System examples....13
8.6. Leading power line and transmission line....13
8.7. Field line connection: transmission wiring and cool/heat selection....13
8.8. Field line connection: power wiring....14
8.9. Wiring example for wiring inside unit....15
9. Pipe insulation....15
10. Checking of unit and installation conditions....15
11. Charging refrigerant....16
11.1. Important information regarding the refrigerant used....16
11.2. Precautions when adding R410A....16
11.3. Stop valve operation procedure....16
11.4. Additional refrigerant charge....17
11.5. Checks after adding refrigerant....19
12. Before operation....20
12.1. Service precautions....20
12.2. Checks before initial start-up....20
12.3. Field setting....20
12.4. Test operation....23
13. Service mode operation....24
14. Caution for refrigerant leaks....24
15. Disposal requirements....25

READ THIS MANUAL ATTENTIVELY BEFORE STARTING UP THE UNIT. DO NOT THROW IT AWAY. KEEP IT IN YOUR FILES FOR FUTURE REFERENCE.

IMPROPER INSTALLATION OR ATTACHMENT OF EQUIPMENT OR ACCESSORIES COULD RESULT IN ELECTRIC SHOCK, SHORT-CIRCUIT, LEAKS, FIRE OR OTHER DAMAGE TO THE EQUIPMENT. BE SURE ONLY TO USE ACCESSORIES MADE BY DAIKIN WHICH ARE SPECIFICALLY DESIGNED FOR USE WITH THE EQUIPMENT AND HAVE THEM INSTALLED BY A PROFESSIONAL.

DAIKIN EQUIPMENT IS DESIGNED FOR COMFORT APPLICATIONS. FOR USE IN OTHER APPLICATIONS, PLEASE CONTACT YOUR LOCAL DAIKIN DEALER.

IF UNSURE OF INSTALLATION PROCEDURES OR USE, ALWAYS CONTACT YOUR DEALER FOR ADVICE AND INFORMATION.

THIS AIR CONDITIONER COMES UNDER THE TERM "APPLIANCES NOT ACCESSIBLE TO THE GENERAL PUBLIC".

The English text is the original instruction. Other languages are translations of the original instructions.

The refrigerant R410A requires strict cautions for keeping the system clean, dry and tight.

- Clean and dry
  Foreign materials (including mineral oils such as SUNISO oil or moisture) should be prevented from getting mixed into the system.
- Tight
  R410A does not contain any chlorine, does not destroy the ozone layer, and does not reduce the earth's protection against harmful ultraviolet radiation. R410A can contribute slightly to the greenhouse effect if it is released. Therefore we should take special attention to check the tightness of the installation.

Read "6. Refrigerant piping" on page 4 carefully and follow these procedures correctly.

Since design pressure is 4.0 MPa or 40 bar (for R407C units: 3.3 MPa or 33 bar), pipes of larger wall thickness may be required. The wall thickness of piping must be carefully selected, refer to paragraph "6.2. Selection of piping material" on page 5 for more details.

1. INTRODUCTION

This installation manual concerns VRV inverters of the Daikin RXYQ-P7 series. These units are designed for outdoor installation and used for cooling and heat pump applications. The RXYQ-P7 series consists of 6 main units and has nominal cooling capacities ranging from 14.0 to 49 kW and nominal heating capacities ranging from 16.0 to 56.5 kW.

The RXYQ-P7 units can be combined with Daikin indoor units for air conditioning purposes, and suitable for R410A.

The present installation manual describes the procedures for unpacking, installing and connecting the RXYQ-P7 units. Installation of the indoor units is not described in this manual. Always refer to the installation manual supplied with these units for their installation.

1.1. Combination

The indoor units can be installed in the following range.

- Always use appropriate indoor units compatible with R410A.
  To learn which models of indoor units are compatible with R410A, refer to the product catalogs.
- Total capacity/number of indoor units

Outdoor unit	Total capacity of indoor units	Total number of indoor units
RXYQ8	160~260	13
RXYQ10	200~325	16
RXYQ12	240~390	19
RXYQ14	280~455	22
RXYQ16	320~520	26
RXYQ18	360~585	29

NOTE

- The table above shows the possible total capacity and number of possible indoor units.
- If the total capacity of the connected indoor units exceeds the capacity of the outdoor unit, cooling and heating performance may drop when running the indoor units.
  Refer to the section on performance characteristics in the Engineering Data Book for details.

1.2. Standard supplied accessories

See location 1 in figure 9 for reference to where following accessories are supplied with the unit.

Installation manual Operation manual	1	
Fluorinated greenhouse gases label	1	
Multilingual fluorinated greenhouse gases label	1	
Additional refrigerant charge label	1	

See location 2 in figure 9 for reference to where following accessories are supplied with the unit.

Gas side accessory pipe		
Unit type	Item	Quantity
8~18 Hp		1
8, 10 Hp		1
12~18 Hp		1
Liquid side accessory pipe		
Unit type	Item	Quantity
8~18 Hp		1
8, 10, 14, 16 Hp		1
12, 18 Hp		1

1.3. Optional accessories

To install the above outdoor units, the following optional parts are also required.

Refrigerant branching kit (for R410A only: Always use an appropriate kit dedicated for your system.)

Refnet joint
KHRQ22M20T
KHRQ22M29T9
KHRQ22M64T

1.4. Technical and Electrical specifications

Refer to the Engineering Data Book for the complete list of specifications.

1.5. System layout (See figure 27)

1	BP unit (branch provider) Choose the BP unit type (2 or 3 indoor units) in function of the installation pattern. ■ For 2 indoor units: BPMKS967B2B ■ For 3 indoor units: BPMKS967B3B
2	Refnet joint (Must be purchased separately).
3	Main piping
4	Branch piping
——	Power supply line (3 wires) → (1~ 50 Hz, 230 V)
-·-·-	Transmission and power supply line (4 wires)
– – –	Transmission line (2 wires)
●	Brazing connection
□	Flare connection

Note down the installation location of each device in the provided space on figure 27. Example: kitchen, children's room, ...

Also fill in this information on the label attached to the backside of the front panel.

This information will be useful when performing test operation.

2. Main components

For main components and function of the main components, refer to the Engineering Data Book.

3. Selection of location

This unit, both indoor and outdoor, is suitable for installation in a commercial and light industrial environment. If installed as a household appliance it could cause electromagnetic interference, in which case the user may be required to take adequate measures.

- Make sure to provide for adequate measures in order to prevent that the outdoor unit be used as a shelter by small animals.
- Small animals making contact with electrical parts can cause malfunctions, smoke or fire. Please instruct the customer to keep the area around the unit clean.

Obtain the customer's permission before installing.

The inverter units should be installed in a location that meets the following requirements:

1 The foundation is strong enough to support the weight of the unit and the floor is flat to prevent vibration and noise generation.

If not, the unit may fall over and cause damage or injury.

2 The space around the unit is adequate for servicing and the minimum space for air inlet and air outlet is available. (Refer to figure 1 and choose one of the possibilities).

A B C D	Sides along the installation site with obstacles
➡	Suction side

- In case of an installation site where sides **A+B+C+D** have obstacles, the wall heights of sides **A+C** have no impact on service space dimensions. Refer to figure 1 for impact of wall heights of sides **B+D** on service space dimensions.
- In case of an installation site where only the sides **A+B** have obstacles, the wall heights have no influence on any indicated service space dimensions.

NOTE The service space dimensions in figure 1 are based on cooling operation at 35°C.

3 Make sure that there is no danger of fire due to leakage of inflammable gas.

4 Ensure that water can not cause any damage to the location in case it drips out the unit (e.g. in case of a blocked drain pipe).

5 The piping length between the outdoor unit and the indoor unit may not exceed the allowable piping length. (Refer to "6.6. Example of connection" on page 8)

6 Select the location of the unit in such a way that neither the discharged air nor the sound generated by the unit disturbs anyone.

7 Make sure that the air inlet and outlet of the unit are not positioned towards the main wind direction. Frontal wind will disturb the operation of the unit. If necessary, use a windscreen to block the wind.

8 Do not install or operate the unit on locations where air contains high levels of salt, like e.g. in the vicinity of oceans. (Refer for further information to the engineering databook).

9 During installation, avoid the possibility that anybody can climb on the unit or place objects on the unit.

Falls may result in injury.

10 When installing the unit in a small room, take measures in order to keep the refrigerant concentration from exceeding allowable safety limits in the event of a refrigerant leak.

Excessive refrigerant concentrations in a closed room can lead to oxygen deficiency.

11 The equipment is not intended for use in a potentially explosive atmosphere.

- The equipment described in this manual may cause electronic noise generated from radio-frequency energy. The equipment complies to specifications that are designed to provide reasonable protection against such interference. However, there is no guarantee that interference will not occur in a particular installation.
  It is therefore recommended to install the equipment and electric wires keeping proper distances away from stereo equipment, personal computers, etc...
  (See figure 2).

1	Personal computer or radio
2	Fuse
3	Earth leakage breaker
4	Remote controller
5	Cool/heat selector
6	Indoor unit

  In places with weak reception, keep distances of 3 m or more to avoid electromagnetic disturbance of other equipment and use conduit tubes for power and transmission lines.
- In heavy snowfall areas, select an installation site where snow will not affect the operation of the unit.
- The refrigerant R410A itself is nontoxic, nonflammable and is safe. If the refrigerant should leak however, its concentration may exceed the allowable limit depending on room size. Due to this, it could be necessary to take measures against leakage. Refer to the chapter "14. Caution for refrigerant leaks" on page 24.
- Do not install in the following locations.
  - Locations where sulfurous acids and other corrosive gases may be present in the atmosphere.
    Copper piping and soldered joints may corrode, causing refrigerant to leak.
  - Locations where a mineral oil mist, spray or vapour may be present in the atmosphere.
    Plastic parts may deteriorate and fall off or causing water leakage.
  - Locations where equipment that produces electromagnetic waves is found.
    The electromagnetic waves may cause the control system to malfunction, preventing normal operation.
  - Locations where flammable gases may leak, where thinner, gasoline, and other volatile substances are handled, or where carbon dust and other incendiary substances are found in the atmosphere.
    Leaked gas may accumulate around the unit, causing an explosion.
- When installing, take strong winds, typhoons or earthquakes into account.
  Improper installation may result in fall over of the unit.

4. Inspecting and handling the unit

At delivery, the package should be checked and any damage should be reported immediately to the carrier claims agent.

When handling the unit, take into account the following:

1 Fragile, handle the unit with care.

Keep the unit upright in order to avoid compressor damage.

2 Choose on beforehand the path along which the unit is to be brought in.

3 Bring the unit as close as possible to its final installation position in its original package to prevent damage during transport. (See figure 4)

1	Packaging material
2	Opening (large)
3	Belt sling
4	Opening (small) (40x45)
5	Protector

4 Lift the unit preferably with a crane and 2 belts of at least 8 m long. (See figure 4)

Always use protectors to prevent belt damage and pay attention to the position of the unit's centre of gravity.

NOTE Use a belt sling of ≤20 mm wide that adequately bears the weight of the unit.

5 If a forklift is to be used, preferably transport the unit with pallet first, then pass the forklift arms through the large rectangular openings on the bottom of the unit. (See figure 5)

5.1 From the moment you use a forklift to move the unit to its final position, lift the unit under the pallet.

5.2 Once at final position, unpack the unit and pass the forklift arms through the large rectangular openings on the bottom of the unit.

NOTE Use filler cloth on the forklift arms to prevent damaging the unit. If the paint on the bottom frame peels off, the anti corrosion effect may decrease.

5. Unpacking and placing the unit

- Remove the four screws fixing the unit to the pallet.
- Make sure the unit is installed level on a sufficiently strong base to prevent vibration and noise.

Do not use stands to only support the corners. (See figure 8)

X	Not allowed
O	Allowed (units: mm)

- Make sure the base under the unit is larger than the 765 mm of the unit depth. (See figure 3)
- The height of the foundation must at least be 150 mm from the floor.
- The unit must be installed on a solid longitudinal foundation (steelbeam frame or concrete) as indicated in figure 3.

Model	A	B
RXYQ8~12	930	792
RXYQ14~18	1240	1102

- Support the unit with a foundation of 67 mm wide or more. (The support leg of the unit is 67 mm wide, see figure 3).
- Fasten the unit in place using four foundation bolts M12. It is best to screw in the foundation bolts until their length remains 20 mm above the foundation surface.

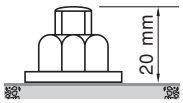

- Prepare a water drainage channel around the foundation to drain waste water from around the unit.
- If the unit is to be installed on a roof, check the strength of the roof and its drainage facilities first.
- If the unit is to be installed on a frame, install the waterproofing board within a distance of 150 mm under the unit in order to prevent infiltration of water coming from under the unit.
- When installed in a corrosive environment, use a nut with plastic washer (1) to protect the nut tightening part from rust.

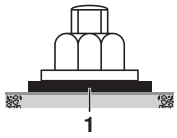

6. Refrigerant piping

Do not insert fingers, rods or other objects into the air inlet or outlet. When the fan is rotating at high speed, it will cause injury.

Use R410A to add refrigerant.

All field piping must be installed by a licensed refrigeration technician and must comply with relevant local and national regulations.

Caution to be taken when brazing refrigerant piping

Do not use flux when brazing copper-to-copper refrigerant piping. (Particularly for the HFC refrigerant piping) Therefore, use the phosphor copper brazing filler metal (BCuP) which does not require flux.

Flux has extremely harmful influence on refrigerant piping systems. For instance, if the chlorine based flux is used, it will cause pipe corrosion or, in particular, if the flux contains fluorine, it will damage the refrigerant oil.

Be sure to perform a nitrogen blow when brazing. Brazing without performing nitrogen replacement or releasing nitrogen into the piping will create large quantities of oxidized film on the inside of the pipes, adversely affecting valves and compressors in the refrigerating system and preventing normal operation.

After completing the installation work, check that the refrigerant gas does not leak.

Toxic gas may be produced if the refrigerant gas leaks into the room and comes in contact with a source of fire.

Ventilate the area immediately in the event of a leak.

In the event of a leak, do not touch the leaked refrigerant directly. Frostbite may be caused.

6.1. Installation tools

Make sure to use installation tools (gauge manifold charge hose, etc.) that are exclusively used for R410A installations to withstand the pressure and to prevent foreign materials (e.g. mineral oils such as SUNISO and moisture) from mixing into the system.
(The screw specifications differ for R410A and R407C.)

Use a 2-stage vacuum pump with a non-return valve which can evacuate to –100.7 kPa (5 Torr, –755 mm Hg).

NOTE Make sure the pump oil does not flow oppositely into the system while the pump is not working.

6.2. Selection of piping material

1. Foreign materials inside pipes (including oils for fabrication) must be 30 mg/10 m or less.
2. Use the following material specification for refrigerant piping:
   - Size: determine the proper size referring to chapter "6.6. Example of connection" on page 8.
   - Construction material: phosphoric acid deoxidized seamless copper for refrigerant.
   - Temper grade: use piping with temper grade in function of the pipe diameter as listed in the table below.

Pipe Ø	Temper grade of piping material
≤15.9	O
≥19.1	1/2H

O = Annealed
1/2H = Half hard

   - The pipe thickness of the refrigerant piping should comply with relevant local and national regulations. The minimal pipe thickness for R410A piping must be in accordance with the table below.

Pipe Ø	Minimal thickness t (mm)
6.4	0.80
9.5	0.80
12.7	0.80
15.9	0.99

Pipe Ø	Minimal thickness t (mm)
19.1	0.80
22.2	0.80
28.6	0.99

3. Make sure to use the particular branches of piping that have been selected referring to chapter "6.6. Example of connection" on page 8.
4. In case the required pipe sizes (inch sizes) are not available, it is also allowed to use other diameters (mm sizes), taken the following into account:
   - select the pipe size nearest to the required size.
   - use the suitable adapters for the change-over from inch to mm pipes (field supply).

6.3. Pipe connection

Be sure to perform a nitrogen blow when brazing and to read the paragraph "Caution to be taken when brazing refrigerant piping" on page 4 first.

NOTE

The pressure regulator for the nitrogen released when doing the brazing should be set to 0.02 MPa or less. (See figure 11)

1	Refrigerant piping
2	Location to be brazed
3	Nitrogen
4	Taping
5	Manual valve
6	Regulator

Do not use anti-oxidants when brazing the pipe joints.

Residue can clog pipes and break equipment.

6.4. Connecting the refrigerant piping

1 Front connection or side connection

Installation of refrigerant piping is possible as front connection or side connection (when taken out from the bottom) as shown in the figure.

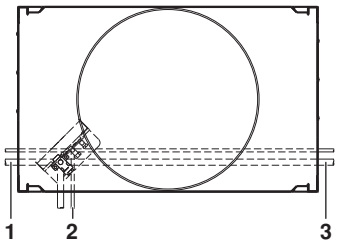

1	Left-side connection
2	Front connection
3	Right-side connection

NOTE

Precautions when knocking out knock holes

- Be sure to avoid damaging the casing
- After knocking out the holes, we recommend you remove the burrs and paint the edges and areas around the edges using the repair paint to prevent rusting.
- When passing electrical wiring through the knock holes, wrap the wiring with protective tape to prevent damage.

2 Removing the pinched piping (See figure 7)

Never remove the pinched piping by brazing.

Any gas or oil remaining inside the stop valve may blow off the pinched piping.

Failure to observe the instructions in procedure below properly may result in property damage or personal injury, which may be serious depending on the circumstances.

Use the following procedure to remove the pinched piping:

1. Remove the valve lid and make sure that the stop valves are fully closed.

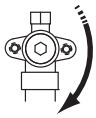

2. Connect a charge hose to service ports of all stop valves.
3. Recover gas and oil from the pinched piping by using a recovery unit.

   Do not vent gases into the atmosphere.

4. When all gas and oil is recovered from the pinched piping, disconnect the charge hose and close the service ports.
5. In case the pinched piping lower part looks like detail **A** in figure 7, follow instructions as per procedure steps 7+8.

   In case the pinched piping lower part looks like detail **B** in figure 7, follow instructions as per procedure steps 6+7+8.
6. Cut off the lower part of the smaller pinched piping with an appropriate tool (e.g. a pipe cutter, a pair of nippers, ...) so that a cross-section is open, allowing remaining oil to drip out in case the recovery was not complete.

   Wait until all oil is dripped out.
7. Cut the pinched piping off with a pipe cutter just above the brazing point or just above the marking in case there is no brazing point.

   Never remove the pinched piping by brazing.

8. Wait until all oil is dripped out in case the recovery was not complete, and only then proceed with connection of the field piping.

See figure 7.

1	Service port
2	Stop valve
3	Point of pipe cutting just above brazing point or above marking
A	Pinched piping
B	Pinched piping

Precautions when connecting field piping.

- Perform brazing at the gas stop valve before brazing at the liquid stop valve.
- Add brazing material as shown in the figure.

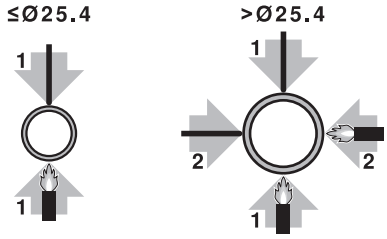

- Be sure to use the supplied accessory pipes when carrying out piping work in the field.
- Be sure that the field installed piping does not touch other pipes, the bottom panel or side panel. Especially for the bottom and side connection, be sure to protect the piping with suitable insulation, to prevent it from coming into contact with the casing.

3 Outdoor unit installed

(See figure 6)

- Front connection:
  Remove the stop valve cover to connect.
- Bottom connection:
  Remove the knock holes on the bottom frame and route the piping under the bottom frame.

A	Front connection Remove the stop valve cover to connect.
B	Bottom connection: Remove the knock holes on the bottom frame and route the piping under the bottom frame
1	Gas pipe stop valve
2	Liquid pipe stop valve
3	Service port for adding refrigerant
4	Gas side accessory pipe (1)
5	Gas side accessory pipe (2)
6	Liquid side accessory pipe (1)
7	Liquid side accessory pipe (2)
8	Brazing
9	Gas side piping (field supply)
10	Liquid side piping (field supply)
11	Punch the knockout holes (use a hammer)

- Processing the gas side accessory pipe (2)
  Only in case of connecting at lateral side, cut the gas side accessory pipe (2) as shown in figure 12.

1	Gas side accessory pipe
2	Cutting location
3	Gas side piping (field supply)
4	Base

Unit type		A	B	C	D
8 Hp	(mm)	156	17	188	247
10 Hp	(mm)	156	23	192	247
12 Hp	(mm)	150	29	192	247
14~18 Hp	(mm)	150	29	192	251

NOTE

- When connecting the piping on site, be sure to use the accessory piping.
- Make sure the onsite piping does not come into contact with other piping, the bottom frame or side panels of the unit.

4 Branching the refrigerant piping

For installation of the refrigerant branching kit, refer to the installation manual delivered with the kit.
(See figure 14)

1 Horizontal surface

Follow the conditions listed below:

- Mount the refnet joint so that it branches either horizontally or vertically.
- Mount the refnet header so that it branches horizontally.

5 Piping length restrictions

Make sure to perform the piping installation within the range of the maximum allowable pipe length, allowable level difference and allowable length after branching as indicated in "6.6. Example of connection" on page 8.

6.5. Protection against contamination when installing pipes

- Take measures to prevent foreign materials like moisture and contamination from mixing into the system.

	Installation period	Protection method
	More than a month	Pinch the pipe
	Less than a month	Pinch or tape the pipe
	Regardless of the period	

- Great caution is needed when passing copper tubes through walls.
- Block all gaps in the holes for passing out piping and wiring using sealing material (field supply). (The capacity of the unit will drop and small animals may enter the machine.)

  Example: passing piping out through the front

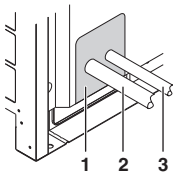

1 Plug the areas marked with "". (When the piping is routed from the front panel.)

2 Gas side piping

3 Liquid side piping

After all the piping has been connected, make sure there is no gas leak. Use nitrogen to perform a gas leak check.

Example of connection
(Connection of 8 units heat pump system)

1 indoor unit

A refrigerant branch kit (refnet joint)

BP1 BP unit

NOTE The refrigerant branch kits must be positioned as close to the BP units as possible (c, d, e must be as short as possible).

Branch with refnet joint

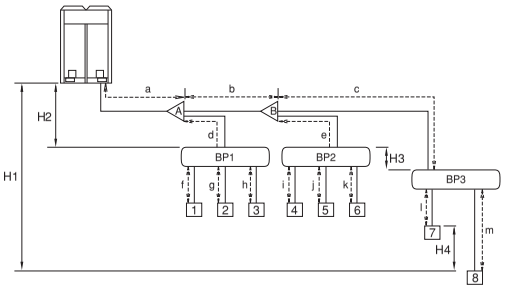

Maximum allowable length	Between outdoor and BP units	Total pipe length	Pipe length between outdoor and BP units ≤55 m
			[Example] BP unit 3: a+b+c+d+e≤55 m
	Between BP and indoor units	Total pipe length	Piping length between BP and indoor units: ≤80 m
			[Example] RXYQ18P: f+g+h+i+j+k+l+m≤80 m
	Between BP and an indoor unit	1 room length	Pipe length between BP and an indoor unit: must be between 2 m and 15 m
			[Example] 2 m≤f, g, h, i, j, k, l, m≤15 m
	Between outdoor and indoor units	Total pipe length	Piping length between outdoor and indoor units: ≤135 m
			[Example] a+b+c+d+e+f+g+h+i+j+k+l+m≤135 m
Minimum allowable length[(a)]	Between outdoor unit and the first refrigerant branch kit	Pipe length	Pipe length between outdoor unit and first refrigerant branch kit: ≥5 m
			[Example] a≥5 m
Allowable height	Between outdoor and indoor units	Difference in height	Difference in height between outdoor and indoor units (H1)≤40 m
	Between outdoor and BP units	Difference in height	Difference in height between outdoor and BP units (H2)≤40 m
	Between BP and BP units	Difference in height	Difference in height between BP and BP units (H3)≤15 m
	Between indoor and indoor units	Difference in height	Difference in height between indoor and indoor units (H4)≤15 m
Allowable length after the branch		Pipe length	Pipe length from first refrigerant branch kit (refnet joint) to indoor unit ≤40 m
			[Example] unit 8: b+c+m≤40 m [Example] unit 6: b+e+k≤40 m [Example] unit 3: d+h≤40 m

Refrigerant branch kit selection

Refrigerant branch kits can only be used with R410A.

How to select the refnet joint

When using refnet joints at the first branch counted from the outdoor unit side.
Choose from the following table in accordance with the capacity of the outdoor unit.

Outdoor unit capacity type	Refrigerant branch kit name
RXYQ8+10	KHRQ22M29T9
RXYQ12~18	KHRQ22M64T

For refnet joints other than the first branch, select the proper branch kit model based on the total capacity index.

Indoor capacity type	Refrigerant branch kit name
<200	KHRQ22M20T
200≤x<290	KHRQ22M29T9
290≤x<585	KHRQ22M64T

(a) The refrigerant sound from the outdoor unit can be transmitted.

Pipe size selection

Choose from the following table in accordance with the outdoor unit total capacity type, connected downstream

	Symbol		Piping size (outer diameter x minimum thickness) Gas pipe	Liquid pipe
Between outdoor and first refrigerant branch kit	a	RXYQ8	Ø19.1x1.0	Ø9.5x0.8
		RXYQ10	Ø22.2x1.0	
		RXYQ12~16	Ø28.6x1.0	Ø12.7x0.8
		RXYQ18		Ø15.9x0.8
Piping between refrigerant branch kits • Choose from the following table in accordance with the total capacity of all the indoor units connected below this. • Do not let the connection piping exceed the refrigerant piping size chosen by general system model name.	b	**Indoor or outdoor unit total capacity**	**Gas pipe**	**Liquid pipe**
		<150	Ø15.9	Ø9.5
		150≤x<200	Ø19.1	
		200≤x<290	Ø22.2	
		290≤x<420	Ø28.6	Ø12.7
		420≤x<585		Ø15.9
Between refrigerant branch kit and BP unit • Pipe size for direct connection to BP unit must be based on the total capacity of the connected indoor units.	c,d,e	**Total capacity of connected indoor units**	**Gas pipe**	**Liquid pipe**
		20~62	Ø12.7	Ø6.4
		63~149	Ø15.9	Ø9.5
		150~208	Ø19.1	
Between BP unit and indoor unit	f,g,h,i,j,k,l,m	**Indoor unit capacity**	**Gas pipe**	**Liquid pipe**
		20, 25, 35	Ø9.5	Ø6.4
		50	Ø12.7	
		60		Ø9.5
		71	Ø15.9	

How to calculate the additional refrigerant to be charged
Additional refrigerant to be charged R (kg)
R should be rounded off in units of 0.1 kg

R = [(X_1 x **Ø15.9**) x0.18] + [(X_2 x **Ø12.7**) x0.12] + [(X_3 x **Ø9.5**) x0.059] + [(X_4 x **Ø6.4**) x0.022] **+ A**

	A
8~12	**0** kg
14~18	**1** kg

$X_{1...6}$ = Total length (m) of liquid piping size at Øa
A = Weight according to table

Example for refrigerant branch using refnet joints for RXYQ18P
If the outdoor unit is RXYQ18P and the piping lengths are as below.

a : Ø15.9x10 m	e : Ø9.5x5 m	i : Ø6.4x4 m	m: Ø6.4x8 m
b : Ø12.7x5 m	f : Ø6.4x4 m	j : Ø6.4x6 m	
c : Ø9.5x10 m	g : Ø6.4x6 m	k : Ø6.4x8 m	
d : Ø9.5x5 m	h : Ø6.4x8 m	l : Ø6.4x4 m	

R = [10x0.18]+[5x0.12]+[20x0.059]+[48x0.022]**+1** = 5.636 kg ⇒ **R = 5.6 kg**

7. Leak test and vacuum drying

The units were checked for leaks by the manufacturer.

After connecting the field piping, perform the following inspections.

1 Preparations

Referring to figure 24, connect a nitrogen tank, a cooling tank, and a vacuum pump to the outdoor unit and perform the airtightness test and the vacuum drying. The stop valve and valves A and B in figure 24 should be open and closed as shown in the table below when performing the airtightness test and vacuum drying.

1	Pressure reducing valve
2	Nitrogen
3	Measuring instrument
4	Tank (siphon system)
5	Vacuum pump
6	Charge hose
7	Service port for adding refrigerant
8	Liquid line stop valve
9	Gas line stop valve
10	Outdoor unit
11	To indoor unit
12	Stop valve service port
13	Dotted lines represent on site piping
14	Valve B
15	Valve C
16	Valve A

State of the valves A and B and the stop valve	Valve A	Valve B	Valve C	Liquid side stop valve	Gas side stop valve
Performing the airtightness test and vacuum drying (Valve A must always be shut. Otherwise the refrigerant in the unit will pour out.)	Close	Open	Open	Close	Close

2 Airtightness test and vacuum drying

NOTE

Make sure to perform airtightness test and vacuum drying using the service ports of the stop valves of the liquid side and of the gas side. (For the service port location, refer to the "Caution" label attached on the front panel of the outdoor unit.)

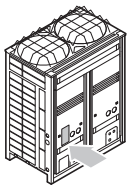

- See "11.3. Stop valve operation procedure" on page 16 for details on handling the stop valve.
- To prevent entry of any contamination and to prevent insufficient pressure resistance, always use the special tools dedicated for working with R410A refrigerant.

- Airtightness test:

NOTE Make sure to use nitrogen gas.

Pressurize the liquid and gas pipes to 4.0 MPa (40 bar) (do not pressurize more than 4.0 MPa (40 bar)). If the pressure does not drop within 24 hours, the system passes the test. If the pressure drops, check where the nitrogen leaks from.

- Vacuum drying: Use a vacuum pump which can evacuate to –100.7 kPa (5 Torr, –755 mm Hg)

1. Evacuate the system from the liquid and gas pipes by using a vacuum pump for more than 2 hours and bring the system to –100.7 kPa. After keeping the system under that condition for more than 1 hour, check if the vacuum gauge rises or not. If it rises, the system may either contain moisture inside or have leaks.
2. Following should be executed if there is a possibility of moisture remaining inside the pipe (if piping work is carried out during the raining season or over a long period of time, rainwater may enter the pipe during work).
   After evacuating the system for 2 hours, pressurize the system to 0.05 MPa (vacuum break) with nitrogen gas and evacuate the system again using the vacuum pump for 1 hour to –100.7 kPa (vacuum drying). If the system can not be evacuated to –100.7 kPa within 2 hours, repeat the operation of vacuum break and vacuum drying.
   Then, after leaving the system in vacuum for 1 hour, confirm that the vacuum gauge does not rise.

8. Field wiring

All field wiring and components must be installed by a licensed electrician and must comply with relevant local and national regulations.

The field wiring must be carried out in accordance with the wiring diagrams and the instructions given below.

Be sure to use a dedicated power circuit. Never use a power supply shared by another appliance. This can lead to electric shock or fire.

Be sure to install an earth leakage circuit breaker.
(Because this unit uses an inverter, install an earth leakage circuit breaker that is capable of handling high harmonics in order to prevent malfunctioning of the earth leakage breaker itself.)

Do not operate until refrigerant piping work is completed.
(If operated before completion of the piping work, the compressor may break down.)

Never remove a thermistor, sensor, etc., when connecting power wiring and transmission wiring.
(If operated without thermistor, sensor, etc., the compressor may break down.)

The reversed phase protection detector of this product only functions when the product starts up. Consequently, reversed phase detection is not performed during normal operation of the product.

The reversed phase protection detector is designed to stop the product in the event of an abnormality when the product is started up.

Replace two of the three phases (L1, L2, and L3) during reverse-phase protection circuit operation.

If the possibility of reversed phase exists after a momentary blackout and the power goes on and off while the product is operating, attach a reversed phase protection circuit locally. Running the product in reversed phase can break the compressor and other parts.

Means for disconnection must be incorporated in the field wiring in accordance with the wiring rules.
(An all-pole disconnection switch must be available on the unit.)

8.1. Internal wiring – Parts table

Refer to the wiring diagram sticker on the unit. The abbreviations used are listed below:

A1P~A7P ..... Printed circuit board
BS1~BS5 ..... Push button switch (mode, set, return, test, reset)
C1,C63,C66 ..... Capacitor
DS1,DS2 ..... Dip switch
E1HC~E3HC..... Crankcase heater
F1U ..... Fuse (250 V, 8 A, B) (A4P, A8P)
F1U,F2U..... Fuse (250 V, 3.15 A, T) (A1P)
F5U ..... Field fuse
F400U ..... Fuse (250 V, 6.3 A, T) (A2P)
H1P~H8P ..... Pilot lamp (service monitor - orange)
H2P: Under preparation or in test operation when blinking
H2P: Malfunction detection when light up
HAP..... Pilot lamp (service monitor - green)
K1..... Magnetic relay
K2..... Magnetic contactor (M1C)
K2M,K3M ..... Magnetic contactor (M2C, M3C)
K1R,K2R ..... Magnetic relay (K2M, K3M)
K3R~K5R ..... Magnetic relay (Y1S~Y3S)
K7R~K9R ..... Magnetic relay (E1HC~E3HC)
L1R ..... Reactor
M1C~M3C..... Motor (compressor)
M1F,M2F ..... Motor (fan)
PS ..... Switching power supply (A1P, A3P)
Q1DI..... Earth leakage breaker (field supply)
Q1RP ..... Phase reversal detection circuit
R1T ..... Thermistor (fin) (A3P)
R1T ..... Thermistor (air) (A1P)
R2T ..... Thermistor (suction)
R4T ..... Thermistor (heat exchanger-deicer)
R5T ..... Thermistor (heat exchanger-outlet)
R6T ..... Thermistor (liquid pipe)
R7T ..... Thermistor (accumulator)
R10 ..... Resistor (current sensor) (A4P, A8P)
R31T~R33T ..... Thermistor (discharge) (M1C~M3C)
R50,R59 ..... Resistor
R95 ..... Resistor (current limiting)
S1NPH ..... Pressure sensor (high)
S1NPL..... Pressure sensor (low)
S1PH,S3PH ..... Pressure switch (high)
T1A ..... Current sensor (A6P, A7P)
SD1 ..... Safety devices input
V1R ..... Power module (A4P, A8P)
V1R,V2R ..... Power module (A3P)
X1A,X4A ..... Connector (M1F, M2F)
X1M..... Terminal strip (power supply)
X1M..... Terminal strip (control) (A1P)
X1M..... Terminal strip (A5P)
Y1E,Y2E ..... Expansion valve (electronic type) (main, subcool)
Y1S ..... Solenoid valve (hotgas bypass)
Y2S ..... Solenoid valve (oil return)
Y3S ..... Solenoid valve (4 way valve)
Z1C~Z7C ..... Noise filter (ferrite core)
Z1F..... Noise filter (with surge absorber)
L1,L2,L3 ..... Live
N..... Neutral
..... Field wiring
..... Terminal strip
..... Connector
..... Terminal
..... Protective earth (screw)
BLK ..... Black
BLU ..... Blue
BRN..... Brown
GRN ..... Green
GRY..... Grey
ORG ..... Orange
PNK..... Pink
RED..... Red
WHT ..... White
YLW..... Yellow

NOTE

- This wiring diagram only applies to the outdoor unit.
- When using the option adaptor, refer to the installation manual.
- Do not operate the unit by short-circuiting protection device S1PH.
- Refer to the installation manual, for connection wiring to BP-outdoor transmission F1-F2.
- When using the central control system, connect outdoor-outdoor transmission F1-F2.

8.2. Optional parts cool/heat selector

S1S ..... Selector switch (fan, cool/heat)
S2S ..... Selector switch (cool/heat)

NOTE

- Use copper conductors only.
- For connection wiring to the central remote controller, refer to the installation manual of the central remote controller.
- Use insulated wire for the power cord.

8.3. Power circuit and cable requirements

A power circuit (see table below) must be provided for connection of the unit. This circuit must be protected with the required safety devices, i.e. a main switch, a slow blow fuse on each phase and an earth leakage breaker.

	Phase and frequency	Voltage	Minimum circuit ampere	Recommended fuses	Transmission line section
RXYQ8	3N~ 50 Hz	400 V	18.5 A	25 A	0.75~1.25 mm^2
RXYQ10	3N~ 50 Hz	400 V	21.6 A	25 A	0.75~1.25 mm^2
RXYQ12	3N~ 50 Hz	400 V	22.7 A	25 A	0.75~1.25 mm^2
RXYQ14	3N~ 50 Hz	400 V	31.5 A	40 A	0.75~1.25 mm^2
RXYQ16	3N~ 50 Hz	400 V	31.5 A	40 A	0.75~1.25 mm^2
RXYQ18	3N~ 50 Hz	400 V	32.5 A	40 A	0.75~1.25 mm^2

When using residual current operated circuit breakers, be sure to use a high-speed type 300 mA rated residual operating current.

Point for attention regarding quality of the public electric power supply

This equipment complies with respectively:

- EN/IEC 61000-3-11(1) provided that the system impedance Z_{sys} is less than or equal to Z_{max} and
- EN/IEC 61000-3-12(2) provided that the short-circuit power S_{sc} is greater than or equal to the minimum S_{sc} value

at the interface point between the user's supply and the public system. It is the responsibility of the installer or user of the equipment to ensure, by consultation with the distribution network operator if necessary, that the equipment is connected only to a supply with respectively:

- Z_{sys} less than or equal to Z_{max} and
- S_{sc} greater than or equal to the minimum S_{sc} value.

	Z_{max} (Ω)	Minimum S_{sc} value
RXYQ8	—	910 kVA
RXYQ10	0.27	838 kVA
RXYQ12	0.27	849 kVA
RXYQ14	0.24	873 kVA
RXYQ16	0.24	873 kVA
RXYQ18	0.24	878 kVA

Be sure to install a main switch for the complete system.

NOTE

- Select the power supply cable in accordance with relevant local and national regulations.
- Wire size must comply with the applicable local and national code.
- Specifications for local wiring power cord and branch wiring are in compliance with IEC60245.
- WIRE TYPE H05VV(*)
  *Only in protected pipes (use H07RN-F when protected pipes are not used).

(1) European/International Technical Standard setting the limits for voltage changes, voltage fluctuations and flicker in public low-voltage supply systems for equipment with rated current ≤75 A.
(2) European/International Technical Standard setting the limits for harmonic currents produced by equipment connected to public low-voltage systems with input current >16 A and ≤75 A per phase.

8.4. General cautions ⚠

- Make sure to connect the power source wire to the power source terminal block and to clamp it as shown in figure 16 and described in chapter "8.8. Field line connection: power wiring" on page 14.
- For conditional connections, refer to the Technical Data.
- As this unit is equipped with an inverter, installing a phase advancing capacitor not only will deteriorate power factor improvement effect, but also may cause capacitor abnormal heating accident due to high-frequency waves. Therefore, never install a phase advancing capacitor.
- Keep power imbalance within 2% of the supply rating.
  - Large imbalance will shorten the life of the smoothing capacitor.
  - As a protective measure, the product will stop operating and an error indication will be made, when power imbalance exceeds 4% of the supply rating.
- Follow the "electrical wiring diagram" supplied with the unit when carrying out any electrical wiring.
- Only proceed with wiring work after all power is shut off.
- Always ground wires. (In accordance with national regulations of the pertinent country.)
- Do not connect the ground wire to gas pipes, sewage pipes, lightning rods, or telephone ground wires. This may cause electric shock.
  - Combustion gas pipes: can explode or catch fire if there is a gas leak.
  - Sewage pipes: no grounding effect is possible if hard plastic piping is used.
  - Telephone ground wires and lightning rods: dangerous when struck by lightning due to abnormal rise in electrical potential in the grounding.
- This unit uses an inverter, and therefore generates noise, which will have to be reduced to avoid interfering with other devices. The outer casing of the product may take on an electrical charge due to leaked electrical current, which will have to be discharged with the grounding.
- Be sure to install an earth leakage breaker. (One that can handle high-frequency electrical noise.)
  (This unit uses an inverter, which means that an earth leakage breaker capable of handling high-frequency electrical noise must be used in order to prevent malfunctioning of the earth leakage breaker itself.)
- Earth leakage breakers that are especially designed for protecting ground-faults must be used in conjunction with main switch and fuse for use with wiring.
- Never connect the power supply in reversed phase.
  The unit can not operate normally in reversed phase. If you connect in reversed phase, replace two of the three phases.
- This unit has a reverse phase detection circuit. (If it is activated, only operate the unit after correcting the wiring.)
- Power supply wires must be attached securely.
- If the power supply has a missing or wrong N-phase, equipment will break down.
- Make sure that all wiring is secure, the specified wires are used, and no external forces act on the terminal connection or wires.
- Improper connections or installation may result in fire.
- When wiring the power supply and connecting the remote controller wiring and transmission wiring, position the wires so that the control box lid can be securely fastened.
  Improper positioning of the control box lid may result in electric shocks, fire, or overheating of the terminals.

8.5. System examples

(See figure 17)

1 Field power supply
2 Main switch
3 Earth leakage breaker
4 Earth
5 BP unit
— Power supply wiring (sheathed cable) (230 V)
— Power supply wiring (sheathed cable) (400 V)
— Transmission wiring (sheathed cable) (16 V)
— Power supply + transmission wiring for indoor units

8.6. Leading power line and transmission line

- Be sure to let the power line and the transmission line pass through a conduit hole.
- Lead the power line from the upper hole on the left side plate, from the front position of the main unit (through the conduit hole of the wiring mounting plate) or from a knock out hole to be made in the unit's bottom plate. (See figure 19)

1 Electric wiring diagram. Printed on the back of the electric box lid.
2 Transmission wiring
3 Pipe opening
4 Conduit
5 Power wiring and ground wiring
6 Cut off the shaded zones before use.
7 Through cover

Precautions when knocking out knockout holes

- To punch a knockout hole, hit on it with a hammer.
- After knocking out the holes, we recommend you paint the edges and areas around the edges using the repair paint to prevent rusting.
- When passing electrical wiring through the knockout holes, remove any burrs from the knockout hole edges. Wrap the wiring with protective tape in order to prevent damage to the wires, put the wires through field supplied protective wire conduits at that location, or install suitable field supplied wire nipples or rubber bushings into the knockout holes.

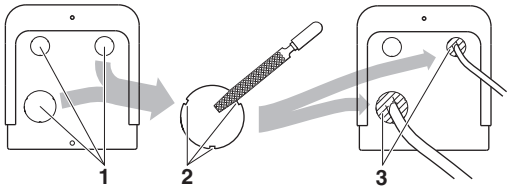

1 Knockout hole
2 Burr
3 If there are any possibilities that small animals enter the system through the knockout holes, plug the holes with packing materials (to be prepared on-site).

- Use a power wire pipe for the power wiring.
- Outside the unit, make sure the weak low voltage electric wiring (i.e. for the remote control, between units, etc.) and the high voltage electric wiring do not pass near each other, keeping them at least 50 mm apart. Proximity may cause electrical interference, malfunctions, and breakage.
- Be sure to connect the power wiring to the power wiring terminal block and secure it as described under "8.8. Field line connection: power wiring" on page 14.
- Inter-unit wiring should be secured as described in "8.7. Field line connection: transmission wiring and cool/heat selection" on page 13.
  - Secure the wiring with the accessory clamps so that it does not touch the piping and no external force can be applied to the terminal.
  - Make sure the wiring and the electric box lid do not stick up above the structure, and close the cover firmly.

8.7. Field line connection: transmission wiring and cool/heat selection

Connection diagram (See figure 18)

1 Cool/heat selector
2 Outdoor unit PC board (A1P)
3 Take care of the polarity
4 Use the conductor of sheathed wire (2 wire) (no polarity)
5 Terminal board (field supply)
6 BP unit
7 Outdoor unit
8 Indoor unit

Fixing transmission wiring (See figure 22)

Inside switchbox

1 Heating/cooling switching remote control cord (when a heating/cooling switch remote control (optional) is connected) (ABC)
2 Fix to the indicated plastic brackets using field supplied clamping material.
3 Wiring between the units (Outdoor - outdoor) (F1+F2 right)
4 Wiring between the units (BP - outdoor) (F1+F2 left)
5 Plastic bracket

Outside unit

- Be sure to follow the limits below. If the unit-to-unit cables are beyond these limits, it may result in malfunction of transmission.
  - Maximum wiring length: 1000 m
  - Total wiring length: 2000 m
  - Maximum interunit wiring length between outdoor units: 30 m
  - Transmission wiring to cool/heat selector: 500 m
  - Maximum number of branches: 16
- Maximum number of independent interconnectable systems (TO OUT/D UNIT F1-F2) : 10.
- Up to 16 branches are possible for unit-to unit cabling. No branching is allowed after branching. (See figure 20)

  1 Outdoor unit
  2 Indoor unit
  3 Main line
  4 BP unit
  5 Branch line
  6 Branch after branch is not allowed
  7 Central remote controller (etc...)
  A Transmission wiring between outdoor unit and BP unit(s)

- Never connect the power supply to transmission wiring terminal block. Otherwise the entire system may break down.
- Never connect 400 V to the terminal block of the interconnecting wiring. Doing so will break the entire system.
  - The wiring from the BP units must be connected to the F1/F2 (In-Out) terminals on the PC board in the outdoor unit.
  - After installing the interconnecting wires inside the unit, wrap them along with the on-site refrigerant pipes using finishing tape, as shown in figure 13.

    1 Liquid pipe
    2 Gas pipe
    3 Insulator
    4 Interconnecting wiring
    5 Finishing tape

  For the above wiring, always use vinyl cords with 0.75 to 1.25 mm^2 sheath or cables (2-core wires). (3-core wire cables are allowable for the cooler/heater changeover remote controller only.)

- Be sure to keep the power line and transmission line apart from each other.
- Be careful about polarity of the transmission line.
- Make sure that the transmission line is clamped as shown in figure 22.
- Check that wiring lines do not make contact with refrigerant piping.
- Firmly close the lid and arrange the electrical wires so as to prevent the lid or other parts from coming loose.
- When you do not use a wire conduit, be sure to protect the wires with vinyl tubes etc, to prevent the edge of the knock-out hole from cutting the wires.

Sequential start

The outdoor unit PC board (A1P) is factory set at "Sequential start available".

Setting the cool/heat operation

1 Performing cool/heat setting with the remote controller connected to the indoor unit.

Keep the cool/heat selector switch (DS1) on the outdoor unit PC board at the factory setting position IN/D UNIT. (See figure 23)

1 Outdoor unit
2 BP unit
3 Indoor unit
4 Remote controller

2 Performing cool/heat setting with the cool/heat selector.

Connect the cool/heat selector remote controller (optional) to the A/B/C terminals and set the cool/heat selector switch (DS1) on the outdoor unit PC board (A1P) to OUT/D UNIT. (See figure 21)

1 Cool/heat selector

8.8. Field line connection: power wiring

The power cord must be clamped to the plastic bracket using field supplied clamp material.

The green and yellow striped wrapped wires must be used for grounding. (See figure 16)

1 Power supply (400 V, 3N~ 50 Hz)
2 Fuse
3 Earth leakage breaker
4 Grounding wire
5 Power supply terminal block
6 Connect each power wire
RED to L1, WHT to L2, BLK to L3 and BLU to N
7 Ground wire (GRN/YLW)
8 Clamp the power wire to the plastic bracket using a field supplied clamp to prevent external force being applied to the terminal.
9 Clamp (field supply)
10 Cup washer
11 When connecting the earth wire, it is recommended to perform curling.

- When routing ground wires, secure clearance of 50 mm or more away from compressor lead wires. Failure to observe this instruction properly may adversely effect correct operation of other units connected to the same ground.
- When connecting the power supply cord, the earth connection must be made before the current-carrying connections are established. When disconnecting the power supply cord, the current-carrying connections must be separated before the earth connection is. Length of the conductors between the power supply cord anchorage and the terminal block itself must be such that the current-carrying conductors are tautened before the earthing conductor is in case the power supply cord is pulled loose from the cord anchorage.

Precautions when laying power wiring

- Do not connect wiring of different thicknesses to the power terminal block. (Slack in the power wiring may cause abnormal heat.)
- When connecting wiring which is the same thickness, do as shown in the figure below.

- For wiring, use the designated power wire and connect firmly, then secure to prevent outside pressure being exerted on the terminal board.
- Use an appropriate screwdriver for tightening the terminal screws. A screwdriver with a small head will strip the head and make proper tightening impossible.
- Over-tightening the terminal screws may break them.
- See the table below for tightening torque for the terminal screws.

Tightening torque (N·m)	
M8 (Power terminal block)	5.5~7.3
M8 (Ground)	
M3 (Inter-unit wiring terminal block)	0.8~0.97

Recommendations when connecting the ground

When pulling the ground wire out, wire it so that it comes through the cut out section of the cup washer. (An improper ground connection may prevent a good ground from being achieved.) (See figure 16)

8.9. Wiring example for wiring inside unit

See figure 26.

1 Electric wiring
2 Wiring between units
3 Clamp to the electric box with field supplied clamps.
4 When routing out the power/ground wires from the right side:
5 When routing the remote control cord and inter-unit wiring, secure clearance of 50 mm or more from the power wiring. Ensure that the power wiring does not contact any heated sections (▨).
6 Clamp to the back of the column support with field supplied clamps.
7 When routing out the inter-unit wirings from the opening for piping:
8 When routing out the power/ground wires from the front:
9 When routing out the ground wires from the left side:
10 Grounding wire
11 When wiring, pay attention not to detach the acoustic insulators from the compressor.
12 Power supply
13 Fuse
14 Earth leakage breaker
15 Ground wire
16 Outdoor unit

9. Pipe insulation

After finishing the leak test and vacuum drying, the piping must be insulated. Take into account the following points:

- Make sure to insulate the connection piping and refrigerant branch kits entirely.
- Be sure to insulate liquid and gas piping (for all units).
- Use heat resistant polyethylene foam which can withstand a temperature of 70°C for liquid side piping and polyethylene foam which can withstand a temperature of 120°C for gas side piping.
- Reinforce the insulation on the refrigerant piping according to the installation environment.

Ambient temperature	Humidity	Minimum thickness
≤30°C	75% to 80% RH	15 mm
>30°C	≥80 RH	20 mm

Condensation might form on the surface of the insulation.

- If there is a possibility that condensation on the stop valve might drip down into the indoor unit through gaps in the insulation and piping because the outdoor unit is located higher than the indoor unit this must be prevented by sealing up the connections. See figure 10.

1 Gas line stop valve
2 Liquid line stop valve
3 Service port for adding refrigerant
4 Sealing up treatment
5 Insulation
6 Indoor -outdoor interconnection piping

Be sure to insulate local pipes, as touching them can cause burns.

10. Checking of unit and installation conditions

Be sure to check the following:

The piping work

1 Make sure piping size is correct.
See "6.2. Selection of piping material" on page 5.

2 Make sure insulation work is done.
See "9. Pipe insulation" on page 15.

3 Make sure there is no faulty refrigerant piping.
See "6. Refrigerant piping" on page 4.

The electrical work

1 Make sure there is no faulty power wiring or loose nuts.
See "8. Field wiring" on page 10.

2 Make sure there is no faulty transmission wiring or loose nuts.
See "8. Field wiring" on page 10.

3 Make sure the insulation resistance of the main power circuit is not deteriorated.

Using a megatester for 500 V, check that the insulation resistance of 2 MΩ or more is attained by applying a voltage of 500 V DC between the power terminals and earth. Never use the megatester for the transmission wiring (between outdoor and indoor unit, outdoor and COOL/HEAT selector, etc.).

11. Charging refrigerant

The outdoor unit is factory charged, but depending on the length of the piping when installed, the outdoor unit may require additional charging.

For charging the additional refrigerant follow the procedure as described in this chapter.

Refrigerant can not be charged until all field wiring and field piping has been completed.

Refrigerant may only be charged after performing the leak test and the vacuum drying.

For factory charge, refer to the unit name plate.

11.1. Important information regarding the refrigerant used

This product contains fluorinated greenhouse gases covered by the Kyoto Protocol. Do not vent gases into the atmosphere.

Refrigerant type: R410A
GWP[1] value: 1975

[1] GWP = global warming potential

Please fill in with indelible ink,

- ① the factory refrigerant charge of the product,
- ② the additional refrigerant amount charged in the field and
- ①+② the total refrigerant charge

on the fluorinated greenhouse gases label supplied with the product.

The filled out label must be adhered on the inside of the product and in the proximity of the product charging port (e.g. on the inside of the service cover).

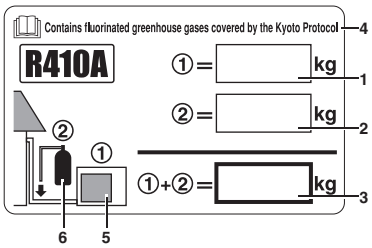

1 factory refrigerant charge of the product: see unit name plate
2 additional refrigerant amount charged in the field
3 total refrigerant charge
4 Contains fluorinated greenhouse gases covered by the Kyoto Protocol
5 outdoor unit
6 refrigerant cylinder and manifold for charging

NOTE

National implementation of EU regulation on certain fluorinated greenhouse gases may require to provide the appropriate official national language on the unit. Therefore, an additional multilingual fluorinated greenhouse gases label is supplied with the unit.

Sticking instructions are illustrated on the backside of that label.

11.2. Precautions when adding R410A

Be sure to charge the specified amount of refrigerant in liquid state to the liquid pipe.

Since this refrigerant is a mixed refrigerant, adding it in gas form may cause the refrigerant composition to change, preventing normal operation.

- Before charging, check whether the refrigerant cylinder is equipped with a siphon tube or not.

Charge the liquid refrigerant with the cylinder in upright position.

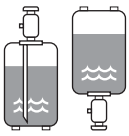

Charge the liquid refrigerant with the cylinder in up-side-down position.

- Be sure to use tools exclusively for R410A to ensure required pressure resistance and to prevent foreign materials from mixing into the system.

Charging with an unsuitable substance may cause explosions and accidents, so always make sure that the appropriate refrigerant (R410A) is charged.

Refrigerant containers must be opened slowly.

11.3. Stop valve operation procedure

- Do not open the stop valve until all piping and electrical steps of "10. Checking of unit and installation conditions" on page 15 are completed. If the stop valve is left open without turning on the power, it may cause refrigerant to build up in the compressor, leading to insulation degradation.
- Always use a charge hose for service port connection.
- After tightening the cap, check that no refrigerant leaks are present.

Size of stop valve

The sizes of the stop valves connected to the system are as listed in the table below.

Type	5	8	10	12	14	16	18
Liquid line stop valve	Ø9.5[a]				Ø12.7[b]		
Gas line stop valve	Ø15.9	Ø19.1	Ø25.4[c]				

(a) The model RXYQ12 supports field piping of Ø12.7 on the accessory pipe supplied with the unit.
(b) The model RXYQ18 supports field piping of Ø15.9 on the accessory pipe supplied with the unit.
(c) The model RXYQ10 supports field piping of Ø22.2 on the accessory pipe supplied with the unit.
The model RXYQ12~18 supports field piping of Ø28.6 on the accessory pipe supplied with the unit.

Opening stop valve (See figure 15)

1 Service port
2 Cap
3 Hexagon hole
4 Shaft
5 Seal

1. Remove the cap and turn the valve counterclockwise with the hexagon wrench.
2. Turn it until the shaft stops.

Do not apply excessive force to the stop valve. Doing so may break the valve body, as the valve is not a backseat type. Always use the special tool.

3. Make sure to tighten the cap securely. Refer to the table below

Stop valve size	Tightening torque N·m (Turn clockwise to close)			
	Shaft		Cap (valve lid)	Service port
	Valve body	Hexagonal wrench		
Ø9.5	5.4~6.6	4 mm	13.5~16.5	11.5~13.9
Ø12.7	8.1~9.9		18.0~22.0	
Ø15.9	13.5~16.5	6 mm	23.0~27.0	
Ø19.1	27.0~33.0	8 mm	22.5~27.5	
Ø25.4				

Closing stop valve (See figure 15)

1. Remove the cap and turn the valve clockwise with the hexagon wrench.
2. Securely tighten the valve until the shaft contacts the main body seal.
3. Make sure to tighten the cap securely.
For the tightening torque, refer to the table above.

11.4. Additional refrigerant charge

Use the described procedure below to charge the refrigerant.

- When charging a system, charging over the allowable quantity can cause liquid hammer.
- Always use protective gloves and protect your eyes when charging refrigerant.
- When the refrigerant charging procedure is done or when pausing, close the valve of the refrigerant tank immediately. If the tank is left with the valve open, the amount of refrigerant which is properly charged may get off point. More refrigerant may be charged by any remaining pressure after the unit has stopped.

Electric shock warning

- Close the electric box lid before turning on the main power.
- Perform the settings on the circuit board (A1P) of the outdoor unit and check the LED display after the power is on via the service lid which is in the lid of the electric box.
  Operate switches with an insulated stick (such as a ball-point pen) to avoid touching the life parts.
  Make sure to re-attach the inspection cover into the switch box cover after the job is finished.

- If the power of some units is turned off, the charging procedure can not be finished properly.
- Make sure to turn ON the power 6 hours before starting the operation. This is necessary to warm the crankcase by the electric heater.
- If operation is performed within 12 minutes after the indoor and outdoor units are turned on, the H2P-LED will be lit and the compressor will not operate.

NOTE

- See "11.3. Stop valve operation procedure" on page 16 for details on how to handle stop valves.
- The refrigerant charging port is connected to the piping inside the unit.
  The unit's internal piping is already factory charged with refrigerant, so be careful when connecting the charge hose.
- After adding the refrigerant, do not forget to close the lid of the refrigerant charging port.
  The tightening torque for the lid is 11.5 to 13.9 N•m.
- In order to ensure uniform refrigerant distribution, it may take the compressor ±10 minutes to start up after the unit has started operation. This is not a malfunction.

1 Adding refrigerant

- **Charge with the outdoor unit at standstill**

1. Calculate how much refrigerant to be added using the formula explained in the chapter "How to calculate the additional refrigerant to be charged" on page 9.
2. Open valve C (valves A and B and the stop valves must be left closed) and charge the required amount of refrigerant through the liquid side stop valve service port.
   (See figure 25)

1	Measuring instrument
2	Tank (siphon system)
3	Charge hose
4	Liquid line stop valve
5	Gas line stop valve
6	Stop valve service port
7	Valve B
8	Valve C
9	Valve A
10	Outdoor unit
11	Refrigerant charge port
12	To indoor unit
13	Interunit piping
14	Refrigerant flow

- When the required amount of refrigerant is fully charged, close valve C. Record the amount of refrigerant that was added on the additional refrigerant charge label provided with the unit and attach it on the back side of the front panel. Perform the test procedure as described in "In case refrigerant was added (pre-charging, charging in heating mode)" on page 23.
- When the additional charging is not complete, perform the procedure explained in the chapter "Charge with operating outdoor unit" on page 18.

■ **Charge with operating outdoor unit**
Charge the refrigerant through valve A.

1. **Start of charging refrigerant manually**
   - Open the liquid and gas side stop valves and the service port stop valve. (Valves A, B and C must be closed.)
   - Close all frontpanels except the electric box frontpanel and turn the power ON.
   - Make sure all indoor units are connected.
   - If the H2P LED is not flashing (in 12 minutes time after turning on the power), make sure it is displayed as shown below.

     If the H2P LED is flashing, check the malfunction code on the remote controller "2 Remote controller malfunction code display" on page 19.
2. Press the **BS1 MODE** button once if the LEDs combination is not as in the figure below.

H1P	H2P	H3P	H4P	H5P	H6P	H7P
●	●	☼	●	●	●	●

3. Press the **BS4 TEST** button once.

H1P	H2P	H3P	H4P	H5P	H6P	H7P
☼	☼	☼	☼	☼	☼	☼

4. Hold the **BS4 TEST** button down for 5 seconds or more.
5. **Charging mode judgement**
   If the indoor temperature is 20°C DB or lower, charging in cooling mode is not possible in some cases. The unit will automatically select the cooling mode or heating mode for charging.

When charging in cooling mode, the unit will stop operating when the required amount of refrigerant is charged.
During charging in heating mode, a person must manually close valve A when complete charging is finished. Calculate how much refrigerant to be added using the formula explained in the chapter "How to calculate the additional refrigerant to be charged" on page 9.

Continue with the manually charging in cooling mode OR in heating mode.

■ Charging in heating mode

6. Start up
   Wait while the unit is preparing for charging in heating mode.

	H1P	H2P	H3P	H4P	H5P	H6P	H7P
Pressure control (for the first minute)	●	◑	●	●	●	●	☼
Start up control (for the next 2 minutes)	◑	◑	●	●	●	☼	●
Waiting for stable heating conditions (for the next ±15 minutes (according to the system))	◑	◑	●	●	●	☼	☼

7. Ready

H1P	H2P	H3P	H4P	H5P	H6P	H7P
◑	◑	●	●	☼	●	☼

   Press the **BS4 TEST** button once within 5 minutes.
   If the **BS4 TEST** button is not pushed within 5 minutes, P2 will be displayed on the remote controller. Refer to "2 Remote controller malfunction code display" on page 19.
8. Operation
   When the following LED display is shown, open valve A and close the frontpanel. If the frontpanel is left open, the system can not operate properly during the refrigerant charging.

H1P	H2P	H3P	H4P	H5P	H6P	H7P
☼	◑	*	*	*	*	*

* = The state of this LED is not important.

When a malfunction occurs, check the display of the remote controller and refer to "2 Remote controller malfunction code display" on page 19.

9. Complete
   If the calculated amount of refrigerant minus 10 kg is reached, close valve A and press the **BS3 RETURN** button once.

H1P	H2P	H3P	H4P	H5P	H6P	H7P
◑	◑	◑	☼	☼	☼	☼

10. Press the **BS1 MODE** button once and the charging is complete.
    Record the amount that was added on the additional refrigerant charge label provided with the unit and attach it on the back side of the front panel.
    Perform the test procedure as described in "In case refrigerant was added (pre-charging, charging in heating mode)" on page 23.

■ Charging in cooling mode

6. Start up
Wait while the unit is preparing for charging in cooling mode.

	H1P	H2P	H3P	H4P	H5P	H6P	H7P
Pressure control (for the first minute)	●	◑	●	●	●	●	☼
Start up control (for the next 2 minutes)	●	◑	●	●	●	☼	●
Waiting for stable heating conditions (for the next ±15 minutes (according to the system))	●	◑	●	●	●	☼	☼

7. Ready

H1P	H2P	H3P	H4P	H5P	H6P	H7P
◑	◑	◑	●	☼	●	☼

Press the **BS4 TEST** button once within 5 minutes.
If the **BS4 TEST** button is not pushed within 5 minutes, P2 will be displayed on the remote controller. Refer to "2 Remote controller malfunction code display" on page 19.

8. Operation
When the following LED display is shown, open valve A and close the frontpanel. If the frontpanel is left open, the system can not operate properly during the refrigerant charging.

H1P	H2P	H3P	H4P	H5P	H6P	H7P
☼	◑	*	*	*	*	*

* = The state of this LED is not important.

When a malfunction occurs, check the display of the remote controller and refer to "2 Remote controller malfunction code display" on page 19.

9. Complete
If the display on the remote controller shows a flashing PE code, charging is almost finished.
When the unit stops operating, close valve A immediately and check the LEDs and check if the P9 code is displayed on the remote controller.

H1P	H2P	H3P	H4P	H5P	H6P	H7P
☼	◑	◑	☼	☼	☼	☼

If it is not as shown above, correct the malfunction (as indicated in the display of the remote controller) and restart the complete charging procedure. When the charging amount is little, the PE code may not be displayed, but instead the P9 code will be displayed immediately.

10. Press the **BS1 MODE** button once and the charging is complete.
Record the amount that was added on the additional refrigerant charge label provided with the unit and attach it on the back side of the front panel.
Perform the test procedure as described in "In case refrigerant was added (charging in cooling mode)" on page 23.

2 Remote controller malfunction code display

Remote controller heating mode malfunction codes

Error code		
P8 recharge operation	Close valve A immediately and press the TEST OPERATION button once. The operation will restart from the charging mode judgement onwards.	
P2 charge hold	Close valve A immediately. Check following items: - Check if the gas side stop valve is opened correctly - Check if the valve of the refrigerant cylinder is opened - Check if the air inlet and outlet of the indoor unit are not obstructed	After correcting the abnormality, restart the automatic charging procedure again.

Remote controller cooling mode malfunction codes

Error code		
PR replace cylinder	Close valve A and replace the empty cylinder. When renewed, open valve A (the outdoor unit will not stop operating). After replacing the cylinder, open valve A again and continue the work.	
P8 recharge operation	Close valve A immediately. Restart the automatic charging procedure again.	
P2 charge hold	Close valve A immediately. Check following items: - Check if the gas side stop valve is opened correctly - Check if the valve of the refrigerant cylinder is opened - Check if the air inlet and outlet of the indoor unit are not obstructed - Check if the indoor temperature is not lower than 20°C DB	After correcting the abnormality, restart the automatic charging procedure again.
* abnormal stop	Close valve A immediately. Confirm the malfunction code by the remote controller and correct the abnormality by following the "Correcting after abnormal completion of the test operation" on page 24.	

11.5. Checks after adding refrigerant

- Are the stop valves for both liquid and gas open?
- Is the amount of refrigerant, that has been added, recorded?

Make sure to open the stop valves after charging the refrigerant.

Operating with the stop valves closed will damage the compressor.

12. Before operation

12.1. Service precautions

WARNING: ELECTRIC SHOCK

Caution when performing service to inverter equipment

1. Do not open the electric box cover for 10 minutes after the power supply is turned off.
2. Measure the voltage between terminals on the terminal block for power supply with a tester and confirm that the power supply is shut off.

   In addition, measure the points, as shown in the figure below, with a tester and confirm that the voltage of the capacitor in the main circuit is less than 50 V DC.

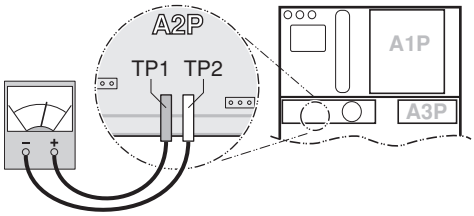

3. To prevent damaging the PC-board, touch a noncoated metal part to eliminate static electricity before pulling out or plugging in connectors.
4. The performing of the service to the inverter equipment must be started after the junction connectors X1A, X2A, X3A, X4A (X3A and X4A are for 14~18 unit type only) for the fan motors in the outdoor unit are been pulled out. Be carefull not to touch the live parts.

   (If a fan rotates due to strong wind, it may store electricity in the capacitor or in the main circuit and cause electric shock.)
5. After the service is finished, plug the junction connecter back in. Otherwise the error code E7 will be displayed on the remote controller and normal operation will not be performed.

For details refer to the wiring diagram labeled on the back of the electric box cover.

Pay attention to the fan. It is dangerous to inspect the unit while the fan is running. Be sure to turn off the main switch and to remove the fuses from the control circuit located in the outdoor unit.

NOTE **Play it safe!**

For protection of the PCB, touch the switch box casing by hand in order to eliminate static electricity from your body before performing service.

12.2. Checks before initial start-up

NOTE Remark that during the first running period of the unit, required power input may be higher than stated on the nameplate of the unit. This phenomenon originates from the compressor that needs elapse of a 50 hours run in period before reaching smooth operation and stable power consumption.

- Make sure that the circuit breaker on the power supply panel of the installation is switched off.
- Attach the power wire securely.
- Introducing power with a missing N-phase or with a mistaken N-phase will break the equipment.

After the installation, check the following before switching on the circuit breaker:

1. The position of the switches that require an initial setting

   Make sure that switches are set according to your application needs before turning the power supply on.
2. Power supply wiring and transmission wiring

   Use a designated power supply and transmission wiring and make sure that it has been carried out according to the instructions described in this manual, according to the wiring diagrams and according to local and national regulations.
3. Pipe sizes and pipe insulation

   Make sure that correct pipe sizes are installed and that the insulation work is properly executed.
4. Air tight test and vacuum drying

   Make sure the air tight test and vacuum drying were completed.
5. Additional refrigerant charge

   The amount of refrigerant to be added to the unit should be written on the included "Added Refrigerant" plate and attached to the rear side of the front cover.
6. Insulation test of the main power circuit

   Using a megatester for 500 V, check that the insulation resistance of 2 MΩ or more is attained by applying a voltage of 500 V DC between power terminals and earth. Never use the megatester for the transmission wiring.
7. Installation date and field setting

   Be sure to keep record of the installation date on the sticker on the rear of the upper front panel according to EN60335-2-40. and keep record of the contents of the field setting.

12.3. Field setting

If required, carry out field settings according to the following instructions. Refer to the service manual for more details.

Opening the switch box and handling the switches

When carrying out field settings, remove the inspection cover (1).

Operate the switches with an insulated stick (such as a ball-point pen) to avoid touching live parts.

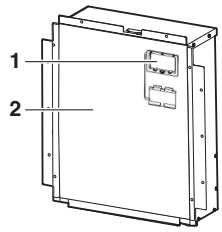

Make sure to re-attach the inspection cover (1) into the switch box cover (2) after the job is finished.

NOTE Make sure that all outside panels, except for the panel on the electric box, are closed while working.

Close the lid of the electric box firmly before turning on the power.

Location of the dip switches, LEDs and buttons

1. LED H1~8P
2. Push button switches BS1~BS5
3. Dip switch 1 (DS1: 1~4)
4. Dip switch 2 (DS2: 1~4)
5. Dip switch 3 (DS3: 1~2)

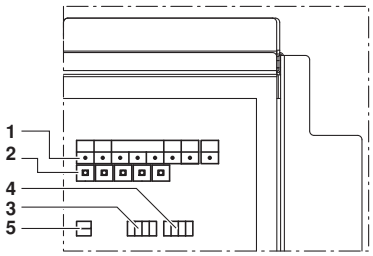

LED state

Throughout the manual the state of the LEDs is indicated as follows:

● OFF

☼ ON

◐ Blinking

Setting the dip switches (only in case of a heat pump unit)

	What to set with dip switch DS1
1	COOL/HEAT selector (refer to "8.7. Field line connection: transmission wiring and cool/heat selection" on page 13) (**OFF** = not installed = factory setting)
2~4	NOT USED DO NOT CHANGE THE FACTORY SETTING.
	What to set with dip switch DS2
1~4	NOT USED DO NOT CHANGE THE FACTORY SETTING.
	What to set with dip switch DS3
1+2	NOT USED DO NOT CHANGE THE FACTORY SETTING.

Setting the push button switch (BS1~5)

Function of the push button switch which is located on the outdoor unit PCB (A1P):

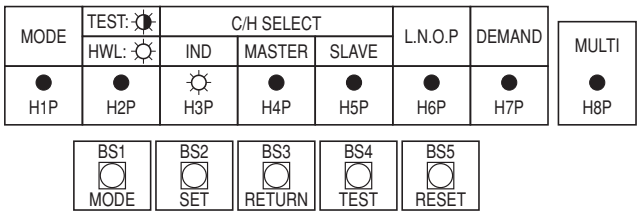

BS1 MODE	For changing the set mode
BS2 SET	For field setting
BS3 RETURN	For field setting
BS4 TEST	For test operation
BS5 RESET	For resetting the address when the wiring is changed or when an additional indoor unit is installed

The figure shows state of the LED indications when the unit is shipped from the factory.

Check operation procedure

1. Turn the power on for the outdoor unit and the indoor unit.
   Be sure to turn the power on at least 6 hours before operation inorder to have power running to the crank case heater.
2. Make sure that transmission is normal by checking the LED display on the outdoor unit circuit board (A1P). (If transmission is normal, each LED will be displayed as shown below.)

LED display (Default status before delivery)	Micro-computer operation monitor	Mode	Ready /Error	Cooling/Heating changeover			Low noise	Demand	Multi
				Indivi-dual	Bulk (master)	Bulk (slave)			
	HAP	H1P	H2P	H3P	H4P	H5P	H6P	H7P	H8P
	◐	●	●	☼	●	●	●	●	●

Setting the mode

The set mode can be changed with the **BS1 MODE** button according to the following procedure:

- **For setting mode 1**: Press the **BS1 MODE** button once, the H1P LED is off ●.
- **For setting mode 2**: Press the **BS1 MODE** button for 5 seconds, the H1P LED is on ☼.

If the H1P LED is blinking ◐ and the **BS1 MODE** button is pushed once, the setting mode will change to setting mode 1.

NOTE If you get confused in the middle of the setting process, push the **BS1 MODE** button. Then it returns to setting mode 1 (H1P LED is off).

Setting mode 1

The H1P LED is off (COOL/HEAT selection setting).

Setting procedure

1. Push the **BS2 SET** button and adjust the LED indication to the settings as shown below in the field marked ▒:

H1P	H2P	H3P	H4P	H5P	H6P	H7P
●	●	◐	●	●	●	●

2. Push the **BS3 RETURN** button and the setting is defined.

Setting mode 2

The H1P LED is on.

Setting procedure

1 Push the **BS2 SET** button according to the required function (A~F). The LED indication that matches the required function is shown below in the field marked ▭:

Possible functions

- **A** additional refrigerant charging operation.
- **B** refrigerant recovery operation/vacuuming operation.
- **C** automatic low noise operation setting at nighttime.
- **D** low noise operation level setting (**L.N.O.P**) via the external control adapter.
- **E** power consumption limitation setting (**DEMAND**) via the external control adapter.
- **F** enabling function of the low noise operation level setting (**L.N.O.P**) and/or power consumption limitation setting (**DEMAND**) via the external control adapter (DTA104A61/62).

	H1P	H2P	H3P	H4P	H5P	H6P	H7P
A	☼	●	☼	●	☼	●	●
B	☼	●	☼	●	☼	●	☼
C	☼	●	☼	●	☼	☼	●
D	☼	●	☼	☼	●	●	☼
E	☼	●	☼	☼	☼	☼	●
F	☼	●	●	☼	☼	●	●

2 When the **BS3 RETURN** button is pushed, the current setting is defined.

3 Push the **BS2 SET** button according to the required setting possibility as shown below in the field marked ▭.

3.1 Possible settings for function A, B, and F are **ON** (ON) or **OFF** (OFF).

	H1P	H2P	H3P	H4P	H5P	H6P	H7P
ON	☼	●	●	●	●	◐	●
OFF (a)	☼	●	●	●	●	●	◐

(a) This setting = factory setting

3.2 Possible settings for function C

The noise of level 3 < level 2 < level 1 (◢ **1**).

	H1P	H2P	H3P	H4P	H5P	H6P	H7P
OFF (a)	☼	●	●	●	●	●	●
◢ **1**	☼	●	●	●	●	●	◐
◢ **2**	☼	●	●	●	●	◐	●
◢ **3**	☼	●	●	●	●	◐	◐

(a) This setting = factory setting

3.3 Possible settings for function D and E

For function D (**L.N.O.P**) only: the noise of level 3 < level 2 < level 1 (◢ **1**).

For function E (**DEMAND**) only: the power consumption of level 1< level 2 < level 3 (◢ **3**).

	H1P	H2P	H3P	H4P	H5P	H6P	H7P
◢ **1**	☼	●	●	●	●	●	◐
◢ **2** (a)	☼	●	●	●	●	◐	●
◢ **3**	☼	●	●	●	◐	●	●

(a) This setting = factory setting

4 Push the **BS3 RETURN** button and the setting is defined.

5 When the **BS3 RETURN** button is pushed again, the operation starts according to the setting.

Refer to the service manual for more details and for other settings.

Confirmation of the set mode

The following items can be confirmed by setting mode 1 (H1P LED is off)

Check the LED indication in the field marked ▭.

1 Indication of the present operation state

- ●, normal
- ☼, abnormal
- ◐, under preparation or under test operation

H1P	H2P	H3P	H4P	H5P	H6P	H7P
●	●	☼	●	●	●	●

2 Indication of COOL/HEAT selection setting

	H1P	H2P	H3P	H4P	H5P	H6P	H7P
(a)	●	●	☼	●	●	●	●

(a) This setting = factory setting.

3 Indication of low noise operation state **L.N.O.P**

- ● standard operation (= factory setting)
- ☼ **L.N.O.P** operation

H1P	H2P	H3P	H4P	H5P	H6P	H7P
●	●	☼	●	●	●	●

4 Indication of power consumption limitation setting **DEMAND**

- ● standard operation (= factory setting)
- ☼ **DEMAND** operation

H1P	H2P	H3P	H4P	H5P	H6P	H7P
●	●	☼	●	●	●	●

12.4. Test operation

Do not insert fingers, rods or other objects into the air inlet or outlet. When the fan is rotating at high speed, it will cause injury.

Do not perform the test operation while working on the indoor units.

When performing the test operation, not only the outdoor unit, but the connected indoor unit will operate as well. Working on a indoor unit while performing a test operation is dangerous.

In case refrigerant was added (charging in cooling mode)

- In the check operation, the following checks and judgement will be performed:
  - Check of the stop valve opening
  - Check for wrong wiring
  - Judgement of piping length
- It takes ±30 minutes to complete the check operation.

Check operation procedure

1. Close the electric box lid and all front panels except the one on the side of the electric box.
2. Turn on the power to the outdoor unit and all connected indoor units. Be sure to turn the power ON at least 6 hours before operation in order to have power running to the crank case heater.
3. Make the field setting as needed using the push buttons on the PCB (A1P) of the outdoor unit. Refer to "12.3. Field setting" on page 20.
4. Set the check operation (without initial refrigerant decision) following setting mode 2 in the field setting and perform the check operation.

   The system operates for ±30 minutes and automatically stops the check operation.

   - If no malfunction code is displayed on the remote controller after the system has stopped, check if the operation is completed. Normal operation will be possible after 5 minutes.
   - If a malfunction code is displayed on the remote controller, correct the malfunction and perform the check operation again as decribed in "Correcting after abnormal completion of the test operation" on page 24

In case refrigerant was added (pre-charging, charging in heating mode)

- In the check operation, the following checks and judgement will be performed:
  - Check of the stop valve opening
  - Check for wrong wiring
  - Check of refrigerant overcharge
  - Judgement of piping length
- It takes ±40 minutes to complete the check operation.

Perform the test operation as decribed in the paragraph "Test operation procedure" on page 23.

Test operation procedure

1. Close all front panels except the front panel of the electric box.
2. Turn ON the power to all outdoor units and the connected indoor units.

   Be sure to turn on the power 6 hours before operation in order to have power running to the crank case heater and to protect the compressor.
3. Make the field setting as described in the paragraph "12.3. Field setting" on page 20.
4. Press the **BS1 MODE** button once, and set to the SETTING MODE (H1P LED = OFF).
5. Press and hold the **BS4 TEST** button down for 5 seconds or more. The unit will start the test operation.
   - The test operation is automatically carried out in cooling mode, the H2P LED will light up and the messages "Test operation" and "Under centralized control" will display on the remote controller.
   - It may take 10 minutes to bring the state of the refrigerant uniform before the compressor starts.
   - During the test operation, the refrigerant running sound or the magnetic sound of a solenoid valve may become loud and the LED display may change, but these are not malfunctions.
   - During the test operation, it is not possible to stop the unit operation from a remote controller. To abort the operation, press the **BS3 RETURN** button. The unit will stop after ±30 seconds.
6. Close the front panel in order to let it not be the cause of misjudgement.
7. Check the test operation results by the LED display on the outdoor unit.

	H1P	H2P	H3P	H4P	H5P	H6P	H7P
Normal completion	●	●	☼	●	●	●	●
Abnormal completion	●	☼	☼	●	●	●	●

8. When the test operation is fully completed, normal operation will be possible after 5 minutes.

   Otherwise, refer to "Correcting after abnormal completion of the test operation" on page 24 to take actions for correcting the abnormality.

Correcting after abnormal completion of the test operation

The test operation is only completed if there is no malfunction code displayed on the remote controller. In case of a displayed malfunction code, perform the following actions to correct the abnormality:

- Confirm the malfunction code on the remote controller

Installation error	Error code	Remedial action
The stop valve of the outdoor unit is left closed.	E3 E4 F3 UF	Check referring to the table in "11.4. Additional refrigerant charge" on page 17
The phases of the power to the outdoor unit is reversed.	U1	Exchange two of the three phases (L1, L2, L3) to make a positive phase connection.
No power is supplied to the outdoor or an indoor unit (including phase interruption).	U1 U4	Check if the power wiring for the outdoor unit is connected correctly. (If the power wire is not connected to L2 phase, no malfunction display will appear and the compressor will not work.)
Incorrect interconnections between units	UF	Check if the refrigerant line piping and the unit wiring are consistent with each other.
Refrigerant overcharge	E3 F6 UF	Recalculate the required amount of refrigerant from the piping length and correct the refrigerant charge level by recovering any excessive refrigerant with a refrigerant recovery machine.
Insufficient refrigerant	E4 F3	Check if the additional refrigerant charge has been finished correctly. Recalculate the required amount of refrigerant from the piping length and add an adequate amount of refrigerant.

- After correcting the abnormality, press the **BS3 RETURN** button and reset the malfunction code.
- Carry out the test operation again and confirm that the abnormality is properly corrected.

13. Service mode operation

Vacuuming method

At the first installation, this vacuuming is not required. It is required only for repair purposes.

1. When the unit is at standstill and under the setting mode 2, set the required function B (refrigerant recovery operation/ vacuuming operation) to **ON** (ON).
   - After this is set, do not reset the setting mode 2 until the vacuuming is finished.
   - The H1P LED is on and the remote controller indicates **TEST** (test operation) and (external control) and the operation will be prohibited.
2. Evacuate the system with a vacuum pump.
3. Press the **BS1 MODE** button and reset the setting mode 2.

Refrigerant recovery operation method

by a refrigerant reclaimer

1. When the unit is at standstill and under the setting mode 2, set the required function B (refrigerant recovery operation/ vacuuming operation) to **ON** (ON).
   - The indoor unit and the outdoor unit expansion valves will fully open and some solenoid valves will be turned on.
   - The H1P LED is on and the remote controller indicates **TEST** (test operation) and (external control) and the operation will be prohibited.
2. Cut off the power supply to the indoor units and the outdoor unit with the circuit breaker. After the power supply to one side is cut off, cut off the power supply to the other side within 10 minutes. Otherwise, the communication between the indoor and outdoor unit may become abnormal and the expansion valves will be completely closed again.
3. Recover the refrigerant by a refrigerant reclaimer. For details, see the operation manual delivered with the refrigerant reclaimer.

14. Caution for refrigerant leaks

Introduction

The installer and system specialist shall secure safety against leakage according to local regulations or standards. The following standards may be applicable if local regulations are not available.

This system uses R410A as refrigerant. R410A itself is an entirely safe non-toxic, non-combustible refrigerant. Nevertheless care must be taken to ensure that air conditioning facilities are installed in a room which is sufficiently large. This assures that the maximum concentration level of refrigerant gas is not exceeded, in the unlikely event of major leak in the system and this in accordance to the local applicable regulations and standards.

Maximum concentration level

The maximum charge of refrigerant and the calculation of the maximum concentration of refrigerant is directly related to the humanly occupied space in to which it could leak.

The unit of measurement of the concentration is kg/m^3 (the weight in kg of the refrigerant gas in 1 m^3 volume of the occupied space).

Compliance to the local applicable regulations and standards for the maximum allowable concentration level is required.

According to the appropriate European Standard, the maximum allowed concentration level of refrigerant to a humanly space for R410A is limited to 0.44 kg/m^3.

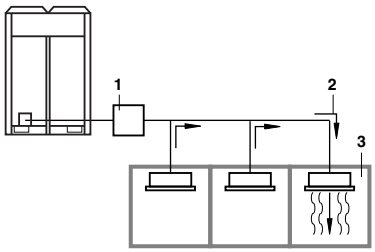

1. BP unit
2. direction of the refrigerant flow
3. room where refrigerant leak has occurred (outflow of all the refrigerant from the system)

Pay special attention to places, such as a basements, etc. where refrigerant can stay, since refrigerant is heavier than air.

Procedure for checking maximum concentration

Check the maximum concentration level in accordance with steps 1 to 4 below and take whatever action is necessary to comply.

1. Calculate the amount of refrigerant (kg) charged to each system separately.

amount of refrigerant in a single unit system (amount of refrigerant with which the system is charged before leaving the factory) + additional charging amount (amount of refrigerant added locally in accordance with the length or diameter of the refrigerant piping) = total amount of refrigerant (kg) in the system

NOTE

Where a single refrigerant facility is divided into 2 entirely independent refrigerant systems, use the amount of refrigerant with which each separate system is charged.

2 Calculate the smallest room volume (m^3)

In a case such as the following, calculate the volume of (A), (B) as a single room or as the smallest room.

A. Where there are no smaller room divisions

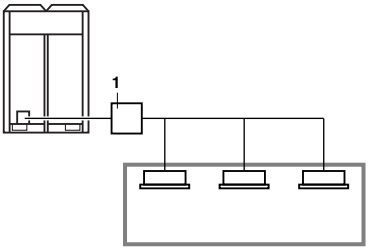

B. Where there is a room division but there is an opening between the rooms sufficiently large to permit a free flow of air back and forth.

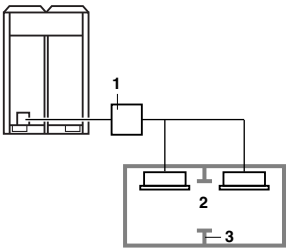

1 BP unit

2 opening between rooms

3 partition
(Where there is an opening without a door or where there are openings above and below the door which are each equivalent in size to 0.15% or more of the floor area.)

3 Calculating the refrigerant density using the results of the calculations in steps 1 and 2 above.

$$\frac{\text{total volume of refrigerant in the refrigerant system}}{\text{size } (m^3) \text{ of smallest room in which there is an indoor unit installed}} \leq \text{maximum concentration level } (kg/m^3)$$

If the result of the above calculation exceeds the maximum concentration level then make similar calculations for the second then third smallest room and so until the result falls short of the maximum concentration.

4 Dealing with the situations where the result exceeds the maximum concentration level.

Where the installation of a facility results in a concentration in excess of the maximum concentration level then it will be necessary to revise the system.
Please consult your supplier.

15. Disposal requirements

Dismantling of the unit, treatment of the refrigerant, of oil and of other parts must be done in accordance with relevant local and national legislation.

Notes

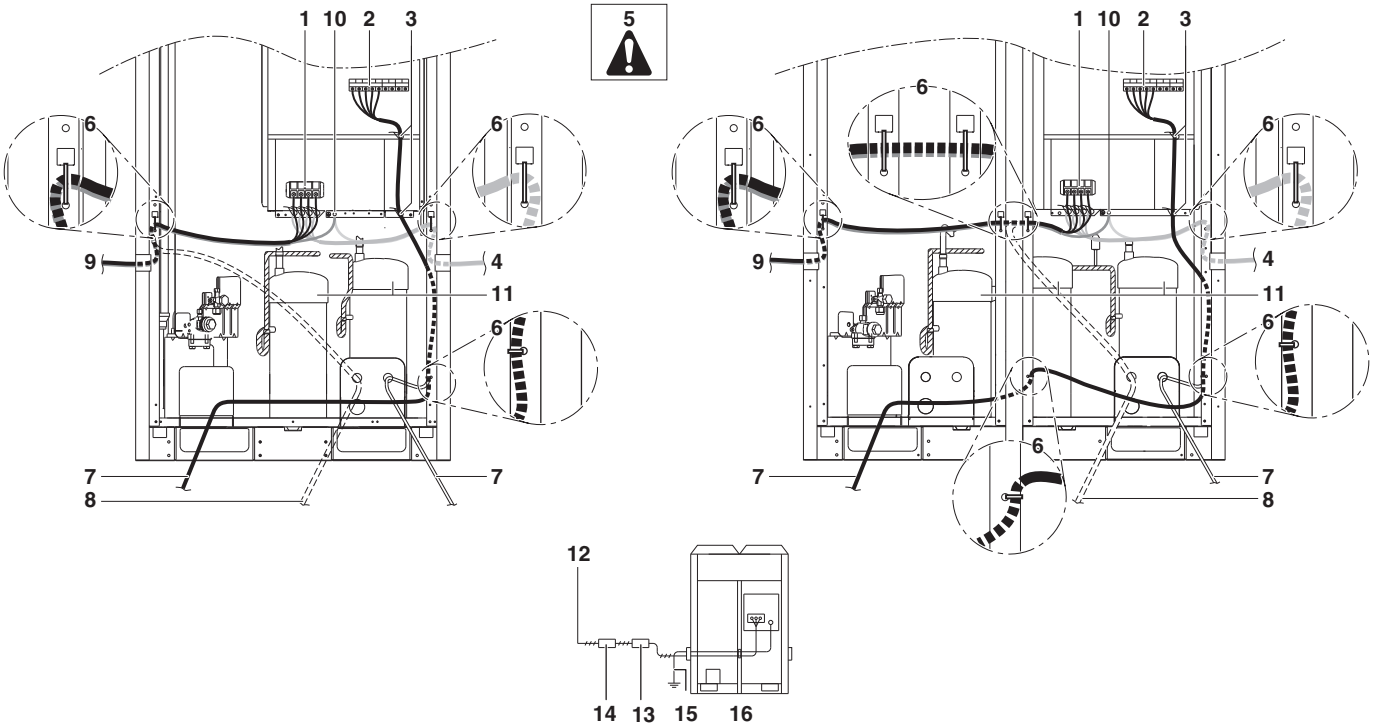

26

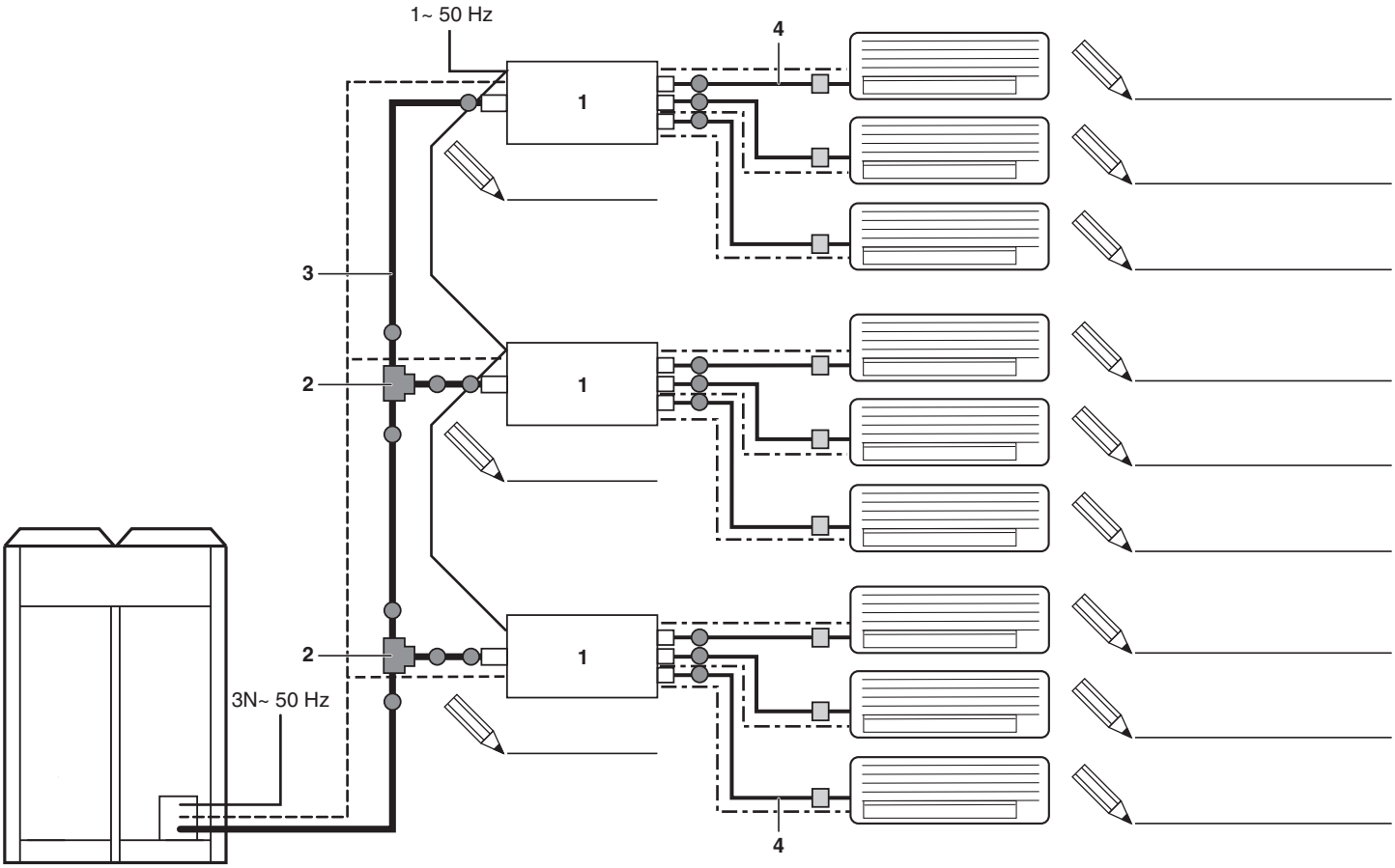

27

4PW44039-1 E 0000000Q

Copyright 2008 Daikin

DAIKIN EUROPE N.V.
Zandvoordestraat 300, B-8400 Oostende, Belgium

4PW44039-1E 07.2010