3P157704-2B

DAIKIN

# Remote Control PC-Board Set <KRP928B2S, KRP928BA2S>

# Installation Manual

## Safety Precautions

●Read these Safety Precautions carefully to ensure correct installation.
This manual classifies precautions into WARNING and CAUTION.

⚠**WARNING :** Failure to follow WARNING is very likely to result in such grave consequences as death or serious injury.

⚠**CAUTION :** Failure to follow CAUTION may result in serious injury or property damage, and in certain circumstances, may result in a grave consequence.

Be sure to follow all the precautions below ; they are all important for ensuring safety.

### ⚠ WARNING

- **Installation should be left to the dealer or another qualified professional.**
  Improper installation by yourself may cause malfunction, electrical shock, or fire.
- **Install the set according to the instructions given in this manual.**
  Incomplete or improper installation may cause malfunction, electrical shock, or fire.
- **Be sure to use the standard attachments or the genuine parts.**
  Use of other parts may cause malfunction, electrical shock, or fire.
- **Disconnect power to the connected equipment before starting installation.**
  Failure to do so may cause malfunction, electrical shock, or fire.

### ⚠ CAUTION

- **An earth leakage circuit breaker should be installed.**
  If the breaker is not installed, electrical shock may occur.
- **Do not install the set in a location where there is danger of exposure to inflammable gas.**
  Gas accumulated around the unit at the worst may cause fire.
- **To prevent damage due to electrostatic discharge, touch your hand to a nearby metal object (doorknob, aluminum sash, etc.) to discharge static electricity from your body before touching this kit.**
  Static electricity can damage this kit.
- **Lay this cable separately from other power cables to avoid external electrical noises.**

●After installation is complete, test the operation of the PCB set to check for problems, and explain how to use the set to the end-user.

## 1.Overview, Features and Compatible Models

This kit is the interface required when connecting the central controller and a Daikin Room Air Conditioner. Use of the central controller makes it possible to perform the following monitoring and operations. It is compatible with room air conditioners which have an HA connector S21.

1.Run / stop for the central controller and wired remote controller, operating mode selection, and temperature can be set.
2.The operating status, any errors, and the content of those errors can be monitored from the central controller and wired remote controller.
3.Run / stop for the central controller and wireless remote controller, operating mode selection, and the temperature setting can be limited by the central controller.
4.Zone control can be performed from the central controller.
5.The unit can remember the operating status of the air conditioner before a power outage and then start operating in the same status when the power comes back on.
6.Card keys, operating control panels, and other constant / instantaneous connection-compatible equipment can be connected.
7.The Operating / error signals can be read.
8.HA JEM-A-compatible equipment can be connected.
9.The indoor temperature can be monitored from the Ve-up controller.

Precaution
1.When reading the Operating / error signals, a separate external power source (DC 12V) is needed.
2.A separate timer power source (DC 16V) is needed when using the schedule timer independently, and not in conjunction with other central controllers.
3.The range of temperatures that can be set from the central controller is 18°C to 32°C in cooling and 14°C to 28°C in heating.
4.Fan operation cannot be selected from the central controller or wired remote controller.
5.Group control (i.e., control of multiple indoor units with a single remote controller) is not available.
6.Monitoring is not available of the thermo status, compressor operating status, indoor fan operating status, electric heater, or humidifier operating status.
7.Forced thermo off, filter sign display and reset, fan direction and speed settings, air conditioning fee management, energy savings instructions, low-noise instructions, and demand instructions cannot be made.

## 2.Component Parts and Separately-Sold Parts which are Required

This kit includes the following components. Check to ensure that none of these are missing.

| Parts | Q'ty | Parts | Q'ty |
|---|---|---|---|
| Kit assy<br>PCB is in the housing.<br>Screw cover | 1 | Connection harness (about 1.6m) | 1set |
| | | Mounting screws | 3pcs. |
| | | Binding band | 1pc. |
| | | Installation manual | 1set |

## 3.Names of Parts and Electric Wiring

**<Wiring procedure>**

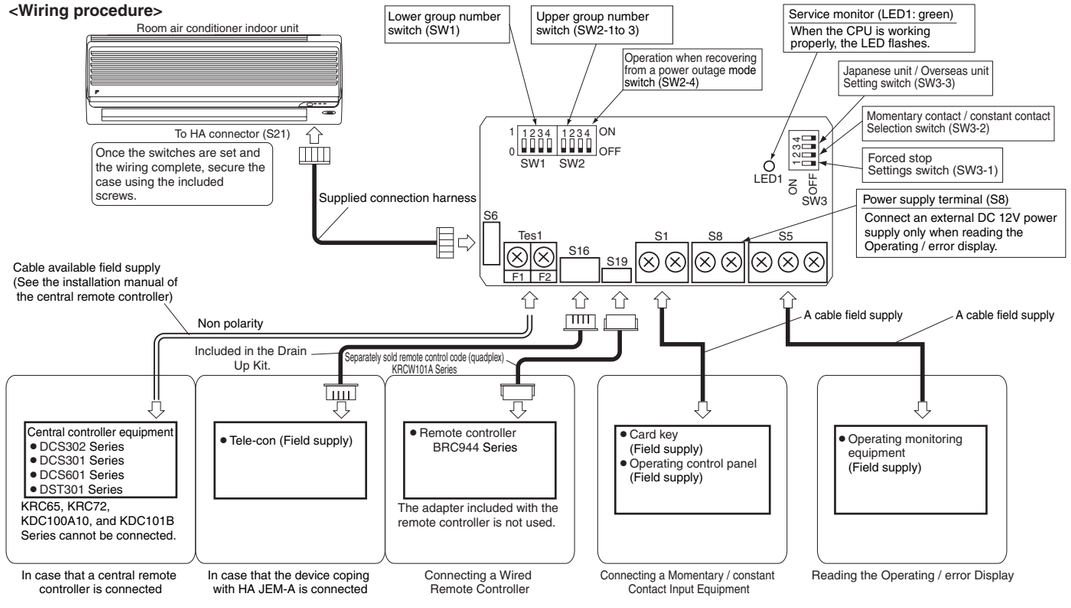


## 4.Switch Settings

| NOTE | Turn the power on after all the switches have been set.<br>Settings made while the power is on are invalid. |
|---|---|

Open the Kit's case and set the switches on the circuit board.
(1) For Overseas / Japanese unit setting (SW3-3)
Room air conditioners, different methods are used for setting the temperature in automatic mode, so this switch needs to be set.

| Destination | SW3-3 setting | What Happens |
|---|---|---|
| Japan | OFF (Factory setting) | • "Automatic" operation is not available from the central controller. When using "automatic" operation using the wireless remote controller, the central controller displays automatic cooling (heating) and 25°C. Even if the temperature is changed, it will return to 25°C after a while. |
| Overseas | ON | • "Automatic" operation is available from the central controller. |

(2) Group number settings (SW1 and SW2-1 to SW2-3)
Set these when using the central controller. (Set to the ■ side.) Do not set more than one unit to the same number.

However, these settings do not need to be made when using the schedule timer independently.
(The settings are needed when used in conjunction with another DCS Series central controller.)
In this case, the schedule timer performs an auto address after the power is turned on, so new group numbers are automatically set. Settings made using the switches will be overwritten.

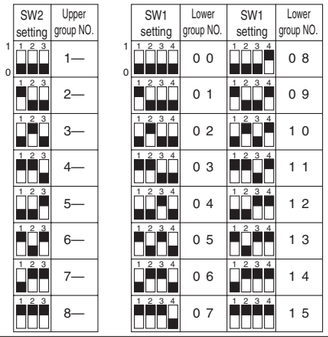


NOTE also that a separate timer power source is needed when using the schedule timer independently.
Power source specs: DC 16V, +10%, -15%, 200mA.
Recommended power source: Omron S82J-01015A. (Should be used with the output voltage adjusted to the center, DC 16V.)

(3) Settings when recovering from a power outage (SW2-4)
This selects whether to restart operation when the power comes back on after a power outage occurred during operation. This setting is given priority in cases where the indoor unit has an auto start ON / OFF jumper. Note also that regardless of whether switch SW2-4 is on or off, the operating mode, set temperature, fan direction and speed settings, and remote control prohibition status are stored.

| SW2-4 setting | What Happens |
|---|---|
| OFF (Factory setting) | Stops after recovering from a power outage |
| ON | Stops if the unit was stopped before the power outage and runs if it was running. |

(4) Contact input function settings (SW3-1 to SW3-2)
When using contact input (S1), choose one of the following functions.

| S1 operating mode | SW3-1 setting | SW3-2 setting | What Happens | Control mode |
|---|---|---|---|---|
| Instantaneous contact input (factory setting) | OFF | OFF | The operating status of the air conditioner is reversed by an instantaneous input of 100 msec or more. | Last command priority |
| Constant contact input | | ON | Contact - Open to close: air condition runs. Close to open: air conditioner is stopped (NOTE 1). | ON / OFF control is rejected (operate / stop / timer prohibition) (NOTE 2). |
| Forced stop or remote controller permission input | ON | Invalid | Contact - Open to close: air condition stops (forced stop). Close to open: no change in operating status. | During a forced stop, all remote controller actions are prohibited. |

NOTE1: Since central equipment and HA JEM-A-compatible equipment both use last command priority, the contact status and operating status of the air conditioner might not match sometimes.
Example: If the unit is run from the central controller while the air conditioner is stopped with an open contact, the contact will be open and the unit will be running.
NOTE2: Operating mode and fan direction and speed settings can be changed.

KRP928B2S

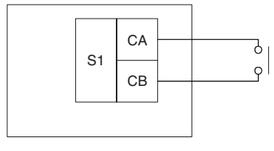


Run / stop Input
Contact specs
No-voltage minute electric current contact
(Minimum applicable load DC 12V, 1mA or lower)

Total wire length max: 100m

## 5.Control Codes

When using a central remote controller, the operating codes can be used to limit operation from wireless remote controllers.
○ : permitted; × : prohibited

| S1 operating mode | Control mode | Control code | Operations from the remote controller: "Run" control from the central controller: Run / timer | Stop | Operating mode temperature | Fan direction and fan speed | "Stop" control from the central controller: Run / timer | Stop | Operating mode temperature | Fan direction and fan speed | Operations from central controller, contact input and HA JEM-A input |
|---|---|---|---|---|---|---|---|---|---|---|---|
| Instantaneous contact mode | ON / OFF control is rejected | 0,1,3 | × | × | ○ | ○ | × | × | ○ | ○ | ○ |
| | | 10,11 | × | × | × | | × | × | × | | |
| | Only OFF control is accepted | 2<br>12–19 | × | ○ | × | | × | ○ | × | | |
| | Central priority | 4 | ○ | ○ | ○ | | × | ○ | × | | |
| | | 5 | ○ | ○ | ○ | | × | × | ○ | | |
| | Last command priority | 6,7 | ○ | ○ | ○ | | ○ | ○ | ○ | | |
| | Timer operation is accepted by remote controller | 8 | ○* | ○* | ○* | | × | ○ | × | | |
| | | 9 | ○* | ○* | ○* | | × | × | ○ | | |
| Constant contact mode | | 2,10-19 | × | × | × | | × | × | × | | |
| | | 0,1,3,5-7 | | | ○ | | | | ○ | | |
| | | 4 | | | ○ | | | | × | | |
| | | 8 | | | ○* | | | | × | | |
| | | 9 | | | ○* | | | | ○ | | |
| Forced stop | | | × | × | × | × | × | × | × | × | |

*Only during timer operation
The remote controller permission / prohibition settings using the Ve-up controller are as follows.
○ : permitted; × : prohibited

| S1 pin operating mode | Ve-up controller settings: Start / stop | Change operating mode | Change set temperature | Operations from the remote controller: Run / timer | Stop | Operating mode temperature | Fan direction and fan speed | Operations from central controller, contact input and HA JEM-A input |
|---|---|---|---|---|---|---|---|---|
| Instantaneous contact mode • Constant contact mode | ON / OFF control is rejected | permitted | permitted/prohibited | × | × | ○ | ○ | ○ |
| | | prohibited | permitted/prohibited | × | × | × | | |
| Instantaneous contact mode | Only OFF control is accepted | permitted | permitted | × | × | ○ | | |
| | | | prohibited | × | ○ | × | | |
| | | prohibited | permitted/prohibited | | | | | |
| Constant contact mode | | permitted | permitted | × | × | ○ | | |
| | | | prohibited | × | × | × | | |
| | | prohibited | permitted/prohibited | | | | | |
| Instantaneous contact mode | Last command priority | permitted | permitted/prohibited | ○ | ○ | ○ | | |
| | | prohibited | permitted/prohibited | × | ○ | × | | |
| Constant contact mode | | permitted | permitted/prohibited | × | × | ○ | | |
| | | prohibited | permitted/prohibited | × | × | × | | |
| Forced stop | Does not affect settings | | | × | × | × | × | |

## 6.Read Operating / Error Display Signal

The Operating / error signals can be read from the contact output (S5).
Output specs
M1: Turn MR 1 ON when the air conditioner is running.
M2: Turn MR 2 when a communication error has occurred between the KRP928B2S and the air conditioner, or MR 1 is ON and the unit has stopped after an error.
MR 2 is not turned ON during a warning.

KRP928B2S

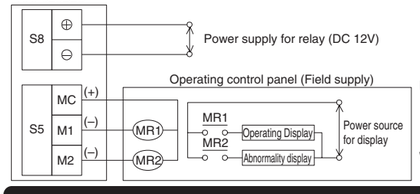


Relay specs (MR1 and MR2)
Coil voltage: DC 12V
Coil resistance: 160Ω ± 10%
(Matsushita Electric HC Relay, Omron MY Relay)
Wiring length
Max: 100m

## 7.Combining Equipment

The central controller can be combined with the following devices.

| | Central Remote Controller | ON / OFF controller | Schedule timer | D-BIPS | Forced stop contact input | Constant contact input | Instantaneous contact input | HA JEM-A-compatible equipment | Wired Remote Controller | Wireless Remote Controller |
|---|---|---|---|---|---|---|---|---|---|---|
| Central Remote Controller | ○ | ○ | ○ | ○ | ○ | ○ | ○ | ○ | ○ | ○ |
| ON / OFF controller | ○ | ○ | ○ | ○ | ○ | ○ | ○ | ○ | ○ | ○ |
| Schedule timer | ○ | ○ | × | × | ○ | ○ | ○ | ○ | ○ | ○ |
| D-BIPS | ○ | ○ | × | × | ○ | ○ | ○ | ○ | ○ | ○ |
| Forced stop contact input | ○ | ○ | ○ | ○ | × | × | × | ○ | ○ | ○ |
| Constant contact input | ○ | ○ | ○ | ○ | × | × | × | ○ | ○ | ○ |
| Instantaneous contact input | ○ | ○ | ○ | ○ | × | × | × | ○ | ○ | ○ |
| HA JEM-A-compatible equipment | ○ | ○ | ○ | ○ | ○ | ○ | ○ | × | ○ | ○ |
| Wired Remote Controller | ○ | ○ | ○ | ○ | ○ | ○ | ○ | ○ | × | × |
| Wireless Remote Controller | ○ | ○ | ○ | ○ | ○ | ○ | ○ | ○ | × | ○ |