Installer reference guide

Daikin Altherma 4 H F

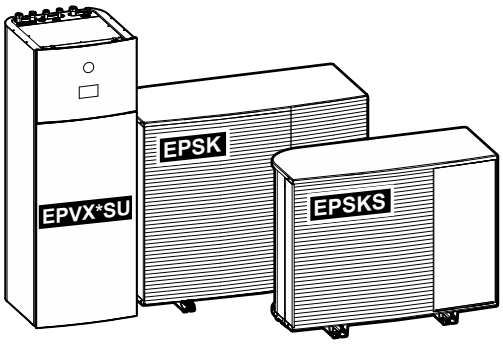

https://daikintechnicaldatahub.eu

EPSKS04A▲V3▼
EPSKS06A▲V3▼
EPSKS07A▲V3▼

EPSK06A▲V3▼
EPSK08A▲V3▼
EPSK10A▲V3▼

EPSK08A▲W1▼
EPSK10A▲W1▼
EPSK12A▲W1▼
EPSK14A▲W1▼

EPVX07SU18+23A▲4V▼
EPVX10SU18+23A▲4V▼
EPVX14SU18+23A▲4V▼

▲= 1, 2, 3, ..., 9, A, B, C, ..., Z
▼= , , 1, 2, 3, ..., 9

v3.x.x (x = 0, 1, 2, ..., 255)

Table of contents

1 About this document 6
1.1 Meaning of warnings and symbols 7
1.2 Installer reference guide at a glance 8

2 General safety precautions 10
2.1 For the installer 10
2.1.1 General 10
2.1.2 Installation site 11
2.1.3 Refrigerant — in case of R290 11
2.1.4 Water 14
2.1.5 Electrical 14

3 Specific installer safety instructions 17
3.1 Safety checklist before work on R290 units 22

4 About the box 23
4.1 Outdoor unit 23
4.1.1 To handle the outdoor unit 23
4.1.2 To unpack the outdoor unit 25
4.1.3 To remove the accessories from the outdoor unit 27
4.2 Indoor unit 28
4.2.1 To unpack the indoor unit 28
4.2.2 To remove the accessories from the indoor unit 28
4.2.3 To handle the indoor unit 28
4.3 Domestic hot water tank kit 29
4.3.1 To remove the accessories from the domestic hot water tank kit 29
4.4 Checklist for the required DHW accessories 29

5 About the units and options 31
5.1 Identification 31
5.1.1 Identification label: Outdoor unit 31
5.1.2 Identification label: Indoor unit 31
5.2 Combining units and options 32
5.2.1 Possible combinations of indoor unit and outdoor unit 32
5.2.2 Possible options for the outdoor unit 32
5.2.3 Possible options for the indoor unit 33

6 Application guidelines 36
6.1 Overview: Application guidelines 36
6.2 Setting up the space heating/cooling system 37
6.2.1 Single room 37
6.2.2 Multiple rooms – One LWT zone 42
6.2.3 Multiple rooms – Two LWT zones 53
6.3 Setting up an auxiliary heat source for space heating 57
6.4 Setting up the domestic hot water tank 61
6.4.1 System layout – Integrated DHW tank 61
6.4.2 Selecting the volume and desired temperature for the DHW tank 61
6.4.3 Setup and configuration – DHW tank 63
6.4.4 DHW pump for instant hot water 63
6.4.5 DHW pump for disinfection 64
6.4.6 DHW pump for instant hot water and disinfection 65
6.5 Setting up the power consumption control 65
6.5.1 Power limitation by smart meter 67
6.6 Setting up an external temperature sensor 67

7 Unit installation 70
7.1 Preparing the installation site 70
7.1.1 Installation site requirements of the outdoor unit 71
7.1.2 Additional installation site requirements of the outdoor unit in cold climates 72
7.1.3 Installation site requirements of the indoor unit 73
7.2 Opening and closing the units 74
7.2.1 About opening the units 74
7.2.2 To open the outdoor unit 74
7.2.3 To remove the transportation bolt (+ washer) 76
7.2.4 To close the outdoor unit 77
7.2.5 To open the indoor unit 78

7.2.6 To close the indoor unit ... 80
7.3 Mounting the outdoor unit ... 80
7.3.1 About mounting the outdoor unit ... 80
7.3.2 Precautions when mounting the outdoor unit ... 81
7.3.3 To provide the installation structure ... 81
7.3.4 To install the outdoor unit ... 82
7.3.5 To provide drainage ... 83
7.4 Mounting the indoor unit ... 85
7.4.1 About mounting the indoor unit ... 85
7.4.2 To install the indoor unit ... 85
7.4.3 To connect the drain hose to the drain ... 85

8 Piping installation ... 87
8.1 Preparing water piping ... 87
8.1.1 Water circuit requirements ... 87
8.1.2 Formula to calculate the expansion vessel pre-pressure ... 91
8.1.3 To check the water volume and flow rate ... 91
8.1.4 Changing the pre-pressure of the expansion vessel ... 94
8.1.5 To check the water volume: Examples ... 94
8.2 Connecting water piping ... 94
8.2.1 About connecting the water piping ... 94
8.2.2 Precautions when connecting the water piping ... 94
8.2.3 To connect the water piping ... 94
8.2.4 To connect the water piping for domestic hot water ... 98
8.2.5 To connect the recirculation piping ... 101
8.2.6 To fill the water circuit ... 101
8.2.7 To protect the water circuit against freezing ... 102
8.2.8 To fill the domestic hot water tank ... 104
8.2.9 To insulate the water piping ... 104

9 Electrical installation ... 105
9.1 About connecting the electrical wiring ... 105
9.1.1 Precautions when connecting the electrical wiring ... 105
9.1.2 Guidelines when connecting the electrical wiring ... 106
9.1.3 About electrical compliance ... 108
9.1.4 About preferential kWh rate power supply ... 108
9.1.5 Overview of electrical connections except external actuators ... 109
9.1.6 `Field IO` connections ... 109
9.2 Connections to the outdoor unit ... 113
9.2.1 Specifications of standard wiring components ... 113
9.2.2 To connect the electrical wiring to the outdoor unit ... 114
9.2.3 To fix the "Do NOT turn OFF the circuit breaker" stickers ... 116
9.2.4 To reposition the air thermistor on the outdoor unit ... 116
9.3 Connections to the indoor unit ... 117
9.3.1 To connect the electrical wiring to the indoor unit ... 120
9.3.2 To connect the main power supply ... 123
9.3.3 To connect the backup heater power supply ... 125
9.3.4 To connect the normally closed shut-off valve (inlet leak stop) ... 128
9.3.5 To connect the shut-off valve ... 129
9.3.6 To connect the pumps (DHW pump and/or external pumps) ... 130
9.3.7 To connect the domestic hot water ON signal ... 131
9.3.8 To connect the alarm output ... 131
9.3.9 To connect the space cooling/heating ON/OFF output ... 132
9.3.10 To connect the changeover to external heat source ... 132
9.3.11 To connect the bivalent bypass valve ... 133
9.3.12 To connect the electricity meters ... 133
9.3.13 To connect the safety thermostat ... 134
9.3.14 Smart Grid ... 135
9.3.15 To connect the WLAN cartridge (delivered as accessory) ... 139
9.3.16 To connect the Ethernet cable (Modbus / LAN) ... 139

10 Configuration ... 142
10.1 `Configuration wizard` ... 143
[10.1] `Location and language` ... 144
[10.2] NOT USED ... 144
[10.3] `Time/date` ... 144
[10.4] `System` 1/4 ... 144
[10.5] `System` 2/4 ... 145
[10.6] `System` 3/4 ... 146
[10.7] `System` 4/4 ... 146

[10.8] Backup heater ... 147
[10.9] Main zone 1/4 ... 147
[10.10] Main zone 2/4 ... 149
[10.11] Main zone 3/4 (Heating WD curve) ... 149
[10.12] Main zone 4/4 (Cooling WD curve) ... 149
[10.13] Additional zone 1/4 ... 149
[10.14] Additional zone 2/4 ... 150
[10.15] Additional zone 3/4 (Heating WD curve) ... 150
[10.16] Additional zone 4/4 (Cooling WD curve) ... 150
[10.17] Configuration wizard – DHW 1/2 ... 151
[10.18] Configuration wizard – DHW 2/2 ... 151
[10.19] Configuration wizard ... 151
10.2 Weather-dependent curve ... 151
10.2.1 What is a weather-dependent curve? ... 151
10.2.2 Using weather-dependent curves ... 152
10.3 Menu structure: Overview installer settings ... 154

11 Commissioning 156
11.1 Overview: Commissioning ... 158
11.2 Precautions when commissioning ... 159
11.3 Checklist before commissioning ... 159
11.4 Checklist during commissioning ... 160
11.4.1 To unlock the outdoor unit (compressor) ... 161
11.4.2 To open the stop valve of the outdoor unit's refrigerant vessel ... 164
11.4.3 To update the user interface software ... 167
11.4.4 To check the minimum flow rate ... 168
11.4.5 To perform an air purge ... 168
11.4.6 To perform an operation test run ... 170
11.4.7 To perform an actuator test run ... 172
11.4.8 To perform an underfloor heating screed dryout ... 175

12 Hand-over to the user 178

13 Maintenance and service 179
13.1 Maintenance safety precautions ... 179
13.2 Yearly maintenance ... 179
13.2.1 Yearly maintenance outdoor unit: overview ... 179
13.2.2 Yearly maintenance outdoor unit: instructions ... 180
13.2.3 Yearly maintenance indoor unit: overview ... 180
13.2.4 Yearly maintenance indoor unit: instructions ... 180
13.3 To drain the domestic hot water tank ... 182
13.4 To inspect the inside of the domestic hot water tank ... 183
13.5 About cleaning the water filter in case of trouble ... 184
13.5.1 To remove the water filter ... 184
13.5.2 To clean the water filter in case of trouble ... 185
13.5.3 To install the water filter ... 186

14 Troubleshooting 188
14.1 Overview: Troubleshooting ... 188
14.2 Precautions when troubleshooting ... 188
14.3 Solving problems based on symptoms ... 189
14.3.1 Symptom: The unit is NOT heating or cooling as expected ... 189
14.3.2 Symptom: Hot water does NOT reach the desired temperature ... 191
14.3.3 Symptom: The compressor does NOT start (space heating or domestic water heating) ... 191
14.3.4 Symptom: The system is making gurgling noises after commissioning ... 192
14.3.5 Symptom: The pump is making noise (cavitation) ... 192
14.3.6 Symptom: The pressure relief valve opens ... 193
14.3.7 Symptom: The water pressure relief valve leaks ... 193
14.3.8 Symptom: The space is NOT sufficiently heated at low outdoor temperatures ... 194
14.3.9 Symptom: The pressure at the tapping point is temporarily unusually high ... 195
14.3.10 Symptom: Tank disinfection function is NOT completed correctly (AH-error) ... 195
14.4 Solving problems based on error codes ... 196
14.4.1 To display the help text in case of a malfunction ... 196
14.4.2 To use the malfunction filter ... 197
14.4.3 To check the malfunction history ... 200
14.4.4 Error codes of the unit ... 200

15 Disposal 222
15.1 To recover refrigerant ... 222
15.1.1 To manually open the electronic expansion valves ... 225

16 Technical data **226**
16.1 Service space: Outdoor unit ... 227
16.2 Protective zone: Outdoor unit ... 229
16.3 Piping diagram: Outdoor unit ... 232
16.4 Piping diagram: Indoor unit ... 234
16.5 Wiring diagram: Outdoor unit ... 236
16.6 Wiring diagram: Indoor unit ... 240
16.7 Technical specifications: Domestic hot water tank ... 247
16.7.1 Test results in accordance with EN12897 (2016) ... 247
16.7.2 Warning label ... 248
16.8 ESP curve: Indoor unit ... 249

17 Glossary **250**

18 Field settings table **251**

1 About this document

Target audience

Authorised installers

Software version

The settings in this document are applicable for user interface software **v3.x.x** (x = 0, 1, 2, ..., 255). To see the software version of your user interface, go to [6.6.6]: `Information` > `About` > `MMI firmware version`.

Documentation set

This document is part of a documentation set. The complete set consists of:

- **General safety precautions:**
  - Safety instructions that you must read before installing
  - Format: Paper (in the box of the indoor unit)
- **Operation manual:**
  - Quick guide for basic usage
  - Format: Paper (in the box of the indoor unit)
- **User reference guide:**
  - Detailed step-by-step instructions and background information for basic and advanced usage
  - Format: Digital files on https://www.daikin.eu. Use the search function 🔍 to find your model.
- **Installation manual – Outdoor unit:**
  - Installation instructions
  - Format: Paper (in the box of the outdoor unit)
- **Installation manual – Indoor unit:**
  - Installation instructions
  - Format: Paper (in the box of the indoor unit)
- **Installer reference guide:**
  - Preparation of the installation, good practices, reference data, ...
  - Format: Digital files on https://www.daikin.eu. Use the search function 🔍 to find your model.
- **Configuration reference guide:**
  - Configuration of the system.
  - Format: Digital files on https://www.daikin.eu. Use the search function 🔍 to find your model.
- **Addendum book for optional equipment:**
  - Additional info about how to install optional equipment
  - Format: Paper (in the box of the indoor unit) + Digital files on https://www.daikin.eu. Use the search function 🔍 to find your model.

The latest revision of the supplied documentation is published on the regional Daikin website and is available via your dealer.

The original instructions are written in English. All other languages are translations of the original instructions.

Technical engineering data

- A **subset** of the latest technical data is available on the regional Daikin website (publicly accessible).
- The **full set** of the latest technical data is available on the Daikin Business Portal (authentication required).

Online tools

In addition to the documentation set, some online tools are available for installers:

- **Daikin Technical Data Hub**
  - Central hub for technical specifications of the unit, useful tools, digital resources, and more.
  - Publicly accessible via https://daikintechnicaldatahub.eu.
- **Heating Solutions Navigator**
  - Digital toolbox that offers a variety of tools to facilitate the installation and configuration of heating systems.
  - To access the Heating Solutions Navigator, registration to the Stand By Me platform is required. For more information, see https://professional.standbyme.daikin.eu.
- **Daikin e-Care**
  - Mobile app for installers and service technicians that allows you to register, configure and troubleshoot heating systems.
  - Use the QR codes below to download the mobile app for iOS and Android devices. Registration to the Stand By Me platform is required to access the app.

App Store

Google Play

1.1 Meaning of warnings and symbols

DANGER

Indicates a situation that results in death or serious injury.

DANGER: RISK OF ELECTROCUTION

Indicates a situation that could result in electrocution.

DANGER: RISK OF BURNING/SCALDING

Indicates a situation that could result in burning/scalding because of extreme hot or cold temperatures.

DANGER: RISK OF EXPLOSION

Indicates a situation that could result in explosion.

WARNING

Indicates a situation that could result in death or serious injury.

WARNING: FLAMMABLE MATERIAL

CAUTION

Indicates a situation that could result in minor or moderate injury.

NOTICE

Indicates a situation that could result in equipment or property damage.

INFORMATION

Indicates useful tips or additional information.

Symbols used on the unit:

Symbol	Explanation
	Before installation, read the installation and operation manual, and the wiring instruction sheet.
	Before performing maintenance and service tasks, read the service manual.
	For more information, see the installer and user reference guide.
	The unit contains rotating parts. Be careful when servicing or inspecting the unit.

Symbols used in the documentation:

Symbol	Explanation
	Indicates a figure title or a reference to it. **Example:** "1–3 Figure title" means "Figure 3 in chapter 1".
	Indicates a table title or a reference to it. **Example:** "1–3 Table title" means "Table 3 in chapter 1".

1.2 Installer reference guide at a glance

Chapter	Description
About the documentation	What documentation exists for the installer
General safety precautions	Safety instructions that you must read before installing
Specific installer safety instructions	
About the box	How to unpack the units and remove their accessories
About the units and options	▪ How to identify the units ▪ Possible combinations of units and options
Application guidelines	Various installation setups of the system

Chapter	Description
Unit installation	What to do and know to install the system, including information on how to prepare for an installation
Piping installation	What to do and know to install the piping of the system, including information on how to prepare for an installation
Electrical installation	What to do and know to install the electrical components of the system, including information on how to prepare for an installation
Configuration	What to do and know to configure the system after it is installed. For more information, refer to the Configuration reference guide.
Commissioning	What to do and know to commission the system after it is configured
Hand-over to the user	What to give and explain to the user
Maintenance and service	How to maintain and service the units
Troubleshooting	What to do in case of problems
Disposal	How to dispose of the system
Technical data	Specifications of the system
Glossary	Definition of terms
Field settings table	Table to be filled in by the installer, and kept for future reference **Note:** There is also an installer settings table in the user reference guide. This table has to be filled in by the installer and handed over to the user.

2 General safety precautions

In this chapter

2.1 For the installer 10
2.1.1 General 10
2.1.2 Installation site 11
2.1.3 Refrigerant — in case of R290 11
2.1.4 Water 14
2.1.5 Electrical 14

2.1 For the installer

2.1.1 General

If you are NOT sure how to install or operate the unit, contact your dealer.

DANGER: RISK OF BURNING/SCALDING

- Do NOT touch the refrigerant piping, water piping or internal parts during and immediately after operation. It could be too hot or too cold. Give it time to return to normal temperature. If you MUST touch it, wear protective gloves.
- Do NOT touch any accidental leaking refrigerant.

WARNING

Improper installation or attachment of equipment or accessories could result in electrical shock, short-circuit, leaks, fire or other damage to the equipment. ONLY use accessories, optional equipment and spare parts made or approved by Daikin unless otherwise specified.

WARNING

Make sure installation, testing and applied materials comply with applicable legislation (on top of the instructions described in the Daikin documentation).

WARNING

Tear apart and throw away plastic packaging bags so that nobody, especially children, can play with them. **Possible consequence:** suffocation.

WARNING

Provide adequate measures to prevent that the unit can be used as a shelter by small animals. Small animals that make contact with electrical parts can cause malfunctions, smoke or fire.

CAUTION

Wear adequate personal protective equipment (protective gloves, safety glasses,...) when installing, maintaining or servicing the system.

CAUTION

Do NOT touch the air inlet or aluminium fins of the unit.

CAUTION

- Do NOT place any objects or equipment on top of the unit.
- Do NOT sit, climb or stand on the unit.

NOTICE

Works executed on the outdoor unit are best done under dry weather conditions to avoid water ingress.

In accordance with the applicable legislation, it might be necessary to provide a logbook with the product containing at least: information on maintenance, repair work, results of tests, stand-by periods,...

Also, at least, following information MUST be provided at an accessible place at the product:

- Instructions for shutting down the system in case of an emergency
- Name and address of fire department, police and hospital
- Name, address and day and night telephone numbers for obtaining service

In Europe, EN378 provides the necessary guidance for this logbook.

2.1.2 Installation site

- Provide sufficient space around the unit for servicing and air circulation.
- Make sure the installation site withstands the weight and vibration of the unit.
- Make sure the area is well ventilated. Do NOT block any ventilation openings.
- Make sure the unit is level.

Do NOT install the unit in the following places:

- In potentially explosive atmospheres.
- In places where there is machinery that emits electromagnetic waves. Electromagnetic waves may disturb the control system, and cause malfunction of the equipment.
- In places where there is a risk of fire due to the leakage of flammable gases (example: thinner or gasoline), carbon fibre, ignitable dust.
- In places where corrosive gas (example: sulphurous acid gas) is produced. Corrosion of copper pipes or soldered parts may cause the refrigerant to leak.

2.1.3 Refrigerant — in case of R290

INFORMATION

For more information about "Systems using R290 refrigerant", see the dedicated Service Manual ESIE22-02 (available on https://my.daikin.eu).

R290 (propane C3H8) is a refrigerant that displaces air, is a colourless and odourless gas, and forms flammable/explosive mixtures with air.

Before starting work on units charged with R290, the following specific safety measures MUST be applied to avoid creating an explosive atmosphere in case of a refrigerant leak:

1. Check if a work permit is required.
2. Check that all persons involved have been trained and are wearing/carrying the required personal protective equipment. Installers are required to wear anti-static clothing: trousers, jacket, sweater, T-shirt, shoes.

3 Secure the work area by ensuring that no one within a radius of 2 meters can access (e.g. barrier chain). Install CAUTION signalisation (e.g. no smoking allowed).

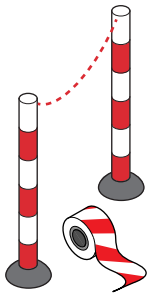

4 Check that no flammable materials are stored in the work area and that there are no ignition sources (e.g. power tools, computers, cell phones) within the work area.

5 Check if suitable tooling and equipment are available. It is necessary to ensure that common hand tools (screwdriver, fork wrench, pipe cutters, etc.) do NOT constitute a source of ignition. Some specific tools are required to be ATEX certified. ATEX is the European directive of explosion safety. The abbreviation comes from the French words ATmosphere EXplosible. Tools and equipment that are explosion proof contain a symbol and marking indicating the protection level.

6 Always carry a personal gas monitoring system suitable for R290 and make sure it is activated. Place it on the floor near the unit. To be able to detect an explosion hazard, an LEL-detector (lower explosion level) is required.

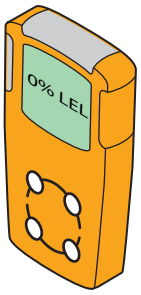

An LEL-detector measures whether a fuel (e.g. R290) is present and which amount is present in the air (vol%). If the mixture is between LEL & UEL and a spark is generated, an explosion can occur.

- A first alarm will be given at 10% of the LEL-value. This is an indication for installers that there is refrigerant present and that there may be a risk of explosion. Immediate action is required: locate and solve leak.

- A second alarm will be given at 20% of the LEL-value. This is an indication for installers that the presence of refrigerant is increasing. From this point onwards it is very dangerous to work on the system.

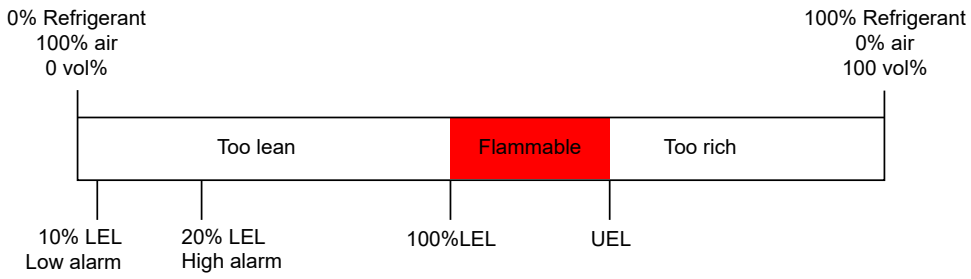

Some gas monitoring systems offer adjustable alarm limits, e.g. 10% and 20% or 15% and 40% of the lower explosion limit (LEL).

7 Bring a portable ventilation unit with you and make sure it is activated (except when using an electronic gas leak detector).

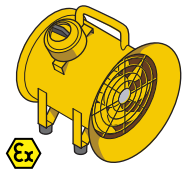

The ventilation unit should be placed near the work area and pointed in a direction that forces any leaked refrigerant away from the work area and installer.

Standard ventilation units cannot be used as the ON/OFF button and fan motor forms a potential ignition source. Therefore, an explosion proof (ATEX) ventilation unit should be used. Additionally, the ventilation unit should be equipped with a power supply cable of at least 3 meter. In this way the unit can be plugged in from outside the work area. Make sure no refrigerant leaks before plugging in or unplugging.

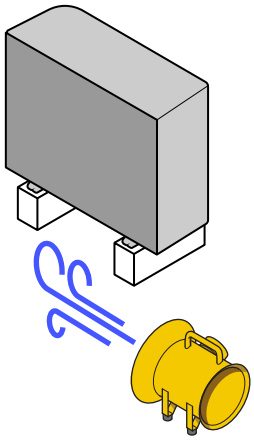

8 Have a fire extinguisher at hand (ABC dry powder or CO_2 extinguisher, minimal 2 kg).

9 Disconnect the unit from the power supply. Place lockout-tagout (LOTO) equipment on the main switch or fuse to prevent that the unit is accidentally powered on during service activities.

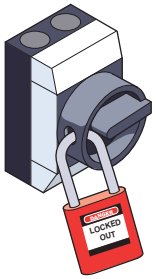

10 Perform a Last Minute Risk Assessment on-site.

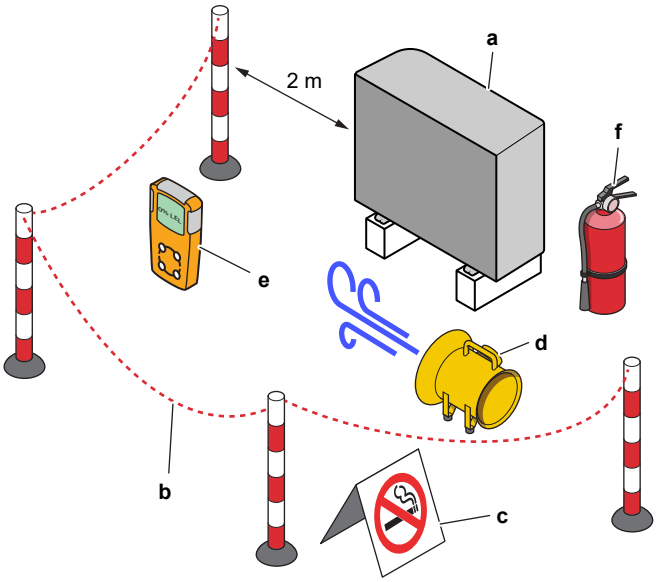

a Unit
b Barrier
c CAUTION signalisation
d Ventilation unit
e Gas monitoring system
f Fire extinguisher

2.1.4 Water

If applicable. See the installation manual or installer reference guide of your application for more information.

NOTICE

Make sure water quality complies with EU directive 2020/2184.

2.1.5 Electrical

DANGER: RISK OF ELECTROCUTION

- Turn OFF all power supply before removing the switch box cover, connecting electrical wiring or touching electrical parts.
- Disconnect the power supply for more than 10 minutes, and measure the voltage at the terminals of main circuit capacitors or electrical components before servicing. The voltage MUST be less than 50 V DC before you can touch electrical components. For the location of the terminals, see the wiring diagram.
- Do NOT touch electrical components with wet hands.
- Do NOT leave the unit unattended when the service cover is removed.

WARNING

If NOT factory installed, a main switch or other means for disconnection, having a contact separation in all poles providing full disconnection under overvoltage category III condition, MUST be installed in the fixed wiring.

WARNING

- ONLY use copper wires.
- Make sure the field wiring complies with the national wiring regulations.
- All field wiring MUST be performed in accordance with the wiring diagram supplied with the product.
- NEVER squeeze bundled cables and make sure they do NOT come in contact with the piping and sharp edges. Make sure no external pressure is applied to the terminal connections.
- Make sure to install earth wiring. Do NOT earth the unit to a utility pipe, surge absorber, or telephone earth. Incomplete or incorrect earthing may cause electrical shock.
- Make sure to use a dedicated power circuit. NEVER use a power supply shared by another appliance.
- Make sure to install the required fuses or circuit breakers.
- Make sure to install an earth leakage protector. Failure to do so may cause electrical shock or fire.
- When installing the earth leakage protector, make sure it is compatible with the inverter (resistant to high frequency electric noise) to avoid unnecessary opening of the earth leakage protector.

WARNING

- After finishing the electrical work, confirm that each electrical component and terminal inside the switch box is connected securely.
- Make sure all covers are closed before starting up the unit.

CAUTION

- When connecting the power supply: connect the earth cable first, before making the current-carrying connections.
- When disconnecting the power supply: disconnect the current-carrying cables first, before separating the earth connection.
- The length of the conductors between the power supply stress relief and the terminal block itself MUST be as such that the current-carrying wires are tautened before the earth wire is in case the power supply is pulled loose from the stress relief.

NOTICE

Precautions when laying power wiring:

- Do NOT connect wiring of different thicknesses to the power terminal block (slack in the power wiring may cause abnormal heat).
- When connecting wiring which is the same thickness, do as shown in the figure above.
- For wiring, use the designated power wire and connect firmly, then secure to prevent outside pressure being exerted on the terminal board.
- Use an appropriate screwdriver for tightening the terminal screws. A screwdriver with a small head will damage the head and make proper tightening impossible.
- Over-tightening the terminal screws may break them.

Install power cables at least 1 meter away from televisions or radios to prevent interference. Depending on the radio waves, a distance of 1 meter may NOT be sufficient.

NOTICE

ONLY applicable if the power supply is three-phase, and the compressor has an ON/OFF starting method.

If there exists the possibility of reversed phase after a momentary black out and the power goes ON and OFF while the product is operating, attach a reversed phase protection circuit locally. Running the product in reversed phase can break the compressor and other parts.

3 Specific installer safety instructions

Always observe the following safety instructions and regulations.

!!Read this before you start the installation!!

Training

- Before you start the installation, follow the Daikin L1 Safety Training (see QR code). Without this training you cannot unlock the outdoor unit (via the e-Care app and the user interface of the indoor unit) and you cannot start operation of the unit.

Personal safety protection tools

- Make sure suitable tooling and work materials are available.

Installation location

- Bring the unit on its pallet as close as possible (≤10 m) to its installation location. Use the slings only to lift the unit from the pallet, and put it in the final installation position.
- Respect the installation location guidelines.
- Respect the protective zone around the outdoor unit (no ignition sources).
- Take a picture of the installed outdoor unit and its environment. You will have to upload it during the unlocking procedure of the outdoor unit.

Hand-over to the user

- Explain to the user how to safely use the R290 heat pump.
- Explain to the user to NOT turn OFF the circuit breakers to the units so that the protection remains activated.

Water quality

- Make sure water quality complies with EU directive 2020/2184.

Earth leakage circuit breaker

- Make sure to install an earth leakage circuit breaker.

Handling the Unit (see "4 About the box" [▸ 23])

CAUTION

To avoid injury, do NOT touch the air inlet or aluminium fins of the unit.

WARNING

Make sure installation, servicing, maintenance and repair comply with instructions from Daikin and with applicable legislation (for example national gas regulation) and are executed ONLY by authorised persons.

Installation site (see "7.1 Preparing the installation site" [▸ 70])

WARNING

Follow the service space dimensions in this manual to install the unit correctly.

- Outdoor unit: See "16.1 Service space: Outdoor unit" [▸ 227].
- Indoor unit: See "7.1.3 Installation site requirements of the indoor unit" [▸ 73].

WARNING

The appliance shall be stored in a room without ignition sources (neither permanent ignition sources nor ignition sources for a short period of time) (example: open flames, an operating gas appliance or an operating electric heater).

WARNING

The appliance shall be installed in an area without ignition sources (neither permanent ignition sources nor ignition sources for a short period of time) (example: open flames, an operating gas appliance or an operating electric heater).

WARNING

Make sure installation, servicing, maintenance and repair comply with instructions from Daikin and with applicable legislation (for example national gas regulation) and are executed ONLY by authorised persons.

Opening and closing the units (see "7.2 Opening and closing the units" [▸ 74])

DANGER: RISK OF ELECTROCUTION

Do NOT leave the unit unattended when the service cover is removed.

DANGER: RISK OF ELECTROCUTION

DANGER: RISK OF BURNING/SCALDING

Mounting the outdoor unit (see "7.3 Mounting the outdoor unit" [▸ 80])

WARNING

Fixing method of the outdoor unit MUST be in accordance with the instructions from this manual. See "7.3 Mounting the outdoor unit" [▸ 80].

CAUTION

To avoid injury, do NOT touch the air inlet or aluminium fins of the unit.

Mounting the indoor unit (see "7.4 Mounting the indoor unit" [▸ 85])

WARNING

The indoor unit installation MUST be in accordance with the instructions from this manual. See "7.4 Mounting the indoor unit" [▸ 85].

Piping installation (see "8 Piping installation" [▸ 87])

WARNING

Field piping MUST be in accordance with the instructions from this manual. See "8 Piping installation" [▸ 87].

WARNING

Install the tundish away from any electrical device. **Possible consequence:** Electrical shock or fire.

WARNING

The discharge pipes from the pressure relief valves MUST terminate in a safe and visible position without forming any risk to persons in the vicinity.

WARNING

- Discharge piping, tundish, drain valves, etc. MUST be positioned away from any electrical components.
- The discharge pipe away from the tundish MUST terminate in a safe, visible position without forming any risk to persons in the vicinity.

WARNING

- Do NOT install any valves between the domestic hot water tank and relief valves/ expansion vessel.
- Do NOT install shut-off valves between the expansion relief valve and the domestic hot water tank.

WARNING

Adding anti-freeze solutions (e.g. glycol) to the water is NOT allowed.

Electrical installation (see "9 Electrical installation" [▶ 105])

DANGER: RISK OF ELECTROCUTION

WARNING

Electrical wiring MUST be in accordance with the instructions from:

- This manual. See "9 Electrical installation" [▶ 105].
- The wiring diagram of the outdoor unit, which is delivered with the unit, located under the top plate of the switch box cover. For a translation of its legend, see "16.5 Wiring diagram: Outdoor unit" [▶ 236].
- The wiring diagram of the indoor unit, which is delivered with the unit, located on the inside of the indoor unit switch box cover. For a translation of its legend, see "16.6 Wiring diagram: Indoor unit" [▶ 240].

WARNING

- All wiring MUST be performed by an authorised electrician and MUST comply with the applicable national wiring regulation.
- Make electrical connections to the fixed wiring.
- All components procured on-site and all electrical construction MUST comply with the applicable legislation.

WARNING

ALWAYS use multicore cable for power supply cables.

WARNING

- If the power supply has a missing or wrong N-phase, equipment might break down.
- Establish proper earthing. Do NOT earth the unit to a utility pipe, surge absorber, or telephone earth. Incomplete or incorrect earthing may cause electrical shocks.
- Install the required fuses or circuit breakers.
- Secure the electrical wiring with cable ties so that the cables do NOT come in contact with sharp edges or piping, particularly on the high-pressure side.
- Do NOT use taped wires, extension cords, or connections from a star system. They can cause overheating, electrical shocks or fire.
- Do NOT install a phase advancing capacitor, because this unit is equipped with an inverter. A phase advancing capacitor will reduce performance and may cause accidents.

CAUTION

Do NOT push or place redundant cable length into the unit.

WARNING

If the supply cord is damaged, it MUST be replaced by the manufacturer, its service agent or similarly qualified persons in order to avoid a hazard.

WARNING

Do NOT extend the power supply or the interconnection cable by using wire connectors, wire connection clamps, taped wires, extension cords.

These can cause overheating, electric shock or fire.

WARNING

After commissioning, do NOT turn OFF the circuit breakers (**c**) to the units so that the protection remains activated. In case of normal kWh rate power supply (**a**), there is one circuit breaker. In case of preferential kWh rate power supply (**b**), there are two.

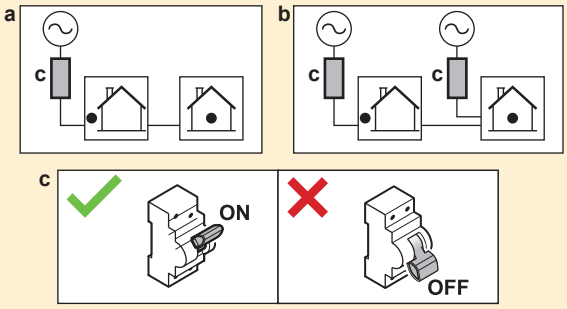

WARNING

The backup heater MUST have a dedicated power supply and MUST be protected by the safety devices required by the applicable legislation.

CAUTION

To guarantee the unit is completely earthed, ALWAYS connect the backup heater power supply and the earth cable.

INFORMATION

For details on the fuse ratings, the fuse types and the circuit breaker ratings, see "9 Electrical installation" [▶ 105].

Commissioning (see "11 Commissioning" [▸ 156])

WARNING

Commissioning MUST be in accordance with the instructions from this manual. See "11 Commissioning" [▸ 156].

WARNING

After commissioning, do NOT turn OFF the circuit breakers (**c**) to the units so that the protection remains activated. In case of normal kWh rate power supply (**a**), there is one circuit breaker. In case of preferential kWh rate power supply (**b**), there are two.

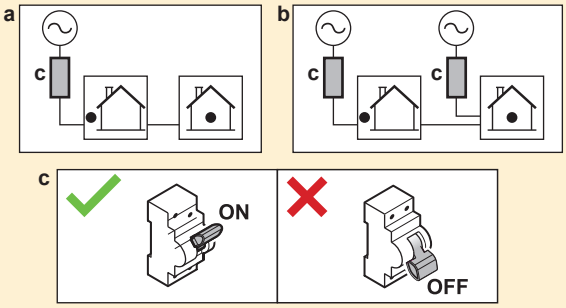

Maintenance and service (see "13 Maintenance and service" [▸ 179])

DANGER: RISK OF ELECTROCUTION

DANGER: RISK OF BURNING/SCALDING

CAUTION

Water coming out of the valve may be very hot.

WARNING

If the internal wiring is damaged, it has to be replaced by the manufacturer, its service agent or similarly qualified persons.

Troubleshooting (see "14 Troubleshooting" [▸ 188])

DANGER: RISK OF ELECTROCUTION

DANGER: RISK OF BURNING/SCALDING

WARNING

- When carrying out an inspection on the switch box of the unit, ALWAYS make sure that the unit is disconnected from the mains. Turn off the respective circuit breaker.
- When a safety device was activated, stop the unit and find out why the safety device was activated before resetting it. NEVER shunt safety devices or change their values to a value other than the factory default setting. If you are unable to find the cause of the problem, call your dealer.

WARNING

Prevent hazards due to inadvertent resetting of the thermal cut-out: power to this appliance MUST NOT be supplied through an external switching device, such as a timer, or connected to a circuit that is regularly turned ON and OFF by the utility.

WARNING

Air purging heat emitters or collectors. Before you purge air from heat emitters or collectors, check if 🔔 or ⚠ is displayed on the home screen of the user interface.

- If not, you can purge air immediately.
- If yes, make sure that the room where you want to purge air is sufficiently ventilated. **Reason:** In case of a breakdown, refrigerant might leak into the water circuit, and subsequently into the room when you purge air from the heat emitters or collectors.

3.1 Safety checklist before work on R290 units

INFORMATION

- For a more detailed description of the safety items in this checklist, see the General Safety Precautions.
- For more information about "Systems using R290 refrigerant", see the dedicated Service Manual ESIE22-02 (available on https://my.daikin.eu).

The outdoor unit contains R290 refrigerant. Before starting work on this unit, check the following safety items:

☐	Work permit obtained if required.
☐	All persons involved have been trained and are wearing/carrying the required personal protective equipment.
☐	Work zone cordoned off, CAUTION signs installed.
☐	Ignition sources removed ▪ Remove power tools, computers, cell phones and other potential ignition sources that can cause sparks from the work area. ▪ Take protective measures to prevent static discharge, for example grounding and antistatic clothing.
☐	Suitable tooling and work materials available ▪ Including ATEX tooling (explosion proof), sufficient nitrogen and required spare parts.
☐	Check for the presence of an explosive atmosphere by placing a personal gas monitoring system on the floor, near the unit. ▪ Suitable for R290 ▪ Calibrated ▪ Operation test ▪ Alarm thresholds ▪ Battery charged
☐	Sufficient ventilation ▪ Place a portable ventilation unit to create sufficient ventilation. ▪ The ventilation unit must be explosion proof.
☐	Fire extinguisher at hand ▪ ABC dry powder or CO_2 extinguisher, minimal 2 kg.
☐	Disconnect and secure the unit from the power supply. ▪ Place lockout-tagout (LOTO).
☐	Perform a Last Minute Risk Assessment (LMRA).

4 About the box

Keep the following in mind:

- At delivery, the unit MUST be checked for damage and completeness. Any damage or missing parts MUST be reported immediately to the claims agent of the carrier.
- Bring the packed unit as close as possible to its final installation position to prevent damage during transport.
- Prepare in advance the path along which you want to bring the unit to its final installation position.

In this chapter

4.1 Outdoor unit 23
4.1.1 To handle the outdoor unit 23
4.1.2 To unpack the outdoor unit 25
4.1.3 To remove the accessories from the outdoor unit 27
4.2 Indoor unit 28
4.2.1 To unpack the indoor unit 28
4.2.2 To remove the accessories from the indoor unit 28
4.2.3 To handle the indoor unit 28
4.3 Domestic hot water tank kit 29
4.3.1 To remove the accessories from the domestic hot water tank kit 29
4.4 Checklist for the required DHW accessories 29

4.1 Outdoor unit

4.1.1 To handle the outdoor unit

CAUTION

To avoid injury, do NOT touch the air inlet or aluminium fins of the unit.

Crane

Keep the slings within the marked area to not damage the unit.

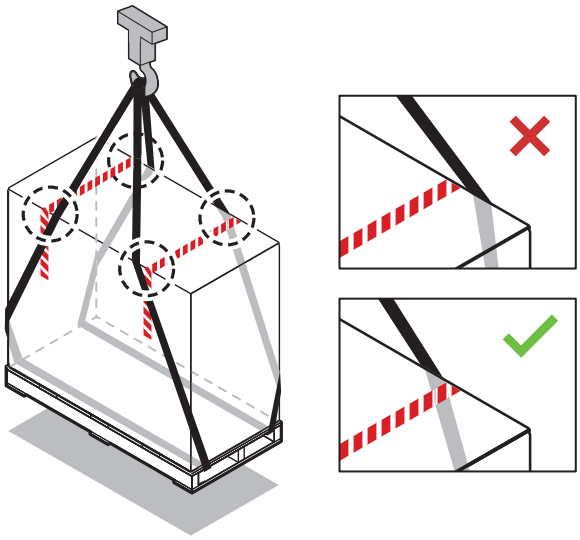

Forklift or pallet truck

Enter the pallet from the heavy side.

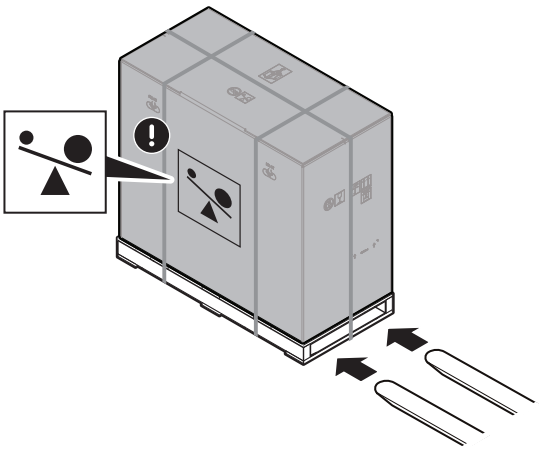

Manually

After unpacking, carry the unit using the slings attached to the unit.

See also:

- "4.1.2 To unpack the outdoor unit" [▸ 25]
- "7.3.4 To install the outdoor unit" [▸ 82]

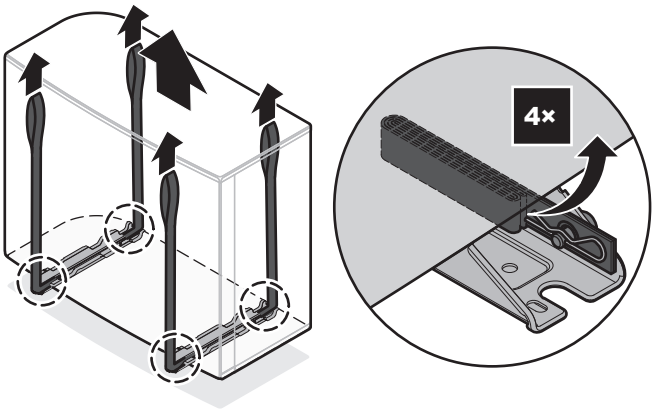

4.1.2 To unpack the outdoor unit

In case of EPSKS04~07A*:

For step 3, see "4.1.3 To remove the accessories from the outdoor unit" [▶ 27].

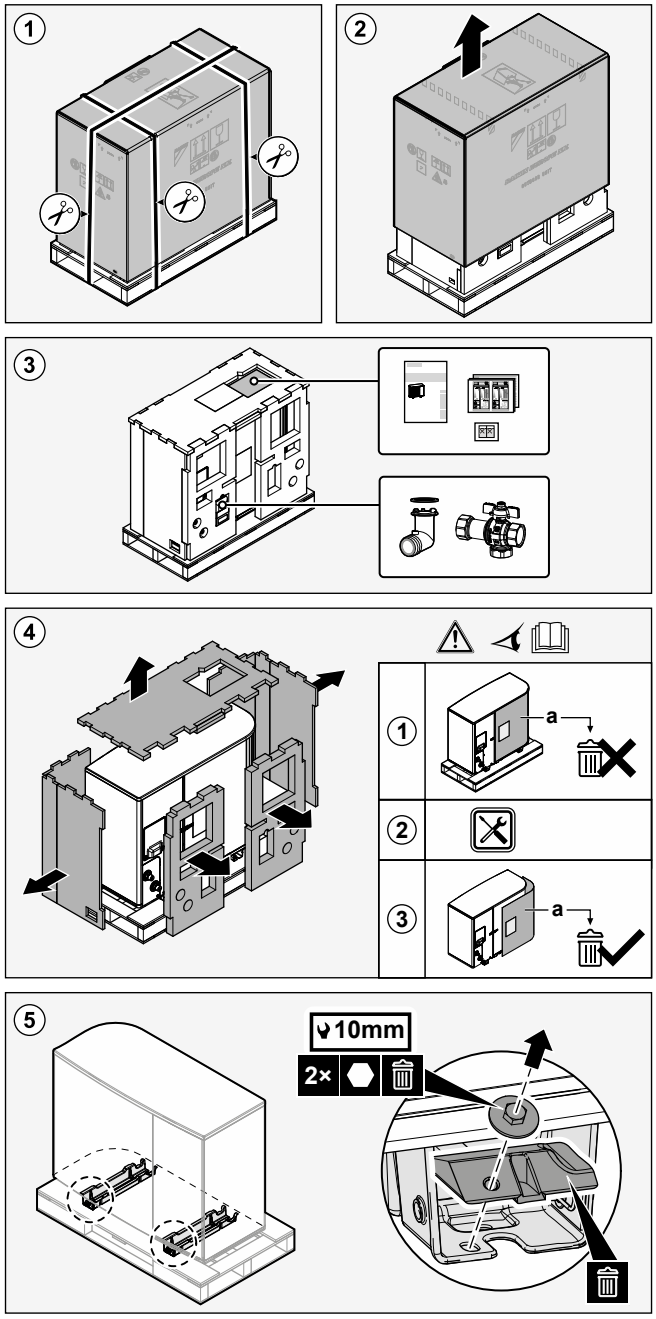

In case of EPSK06~14A*:

For step 3, see "4.1.3 To remove the accessories from the outdoor unit" [▶ 27].

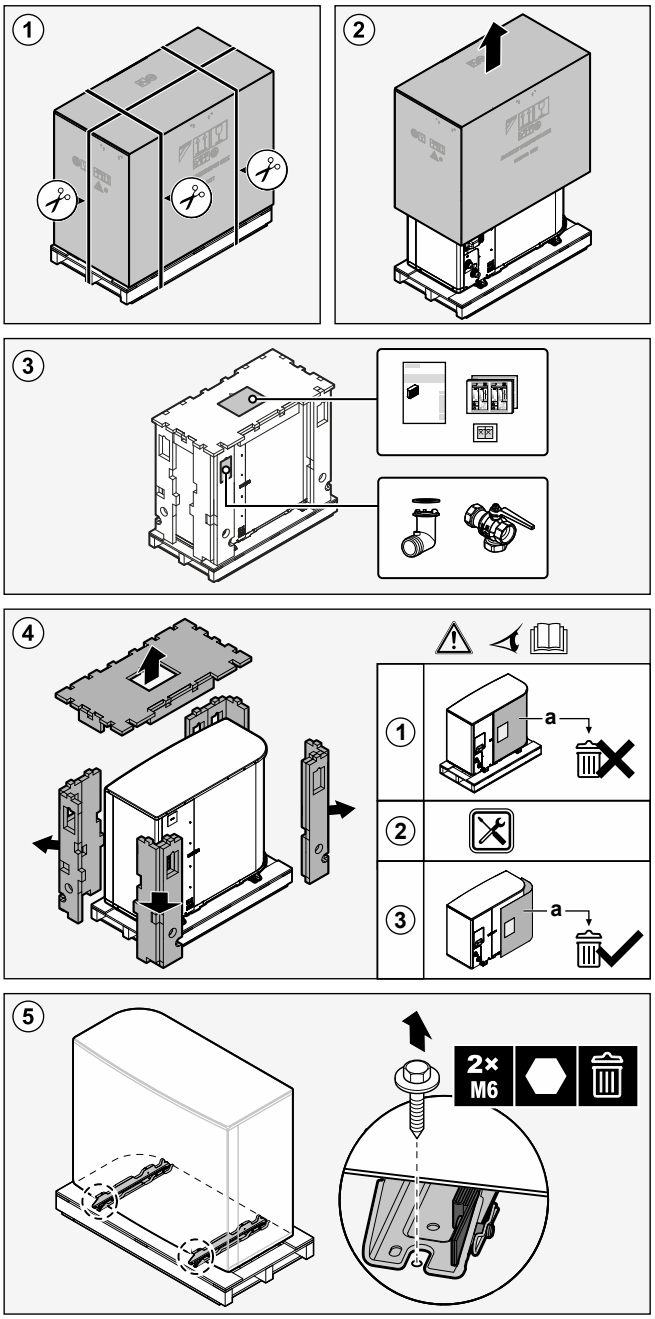

WARNING

Make sure installation, servicing, maintenance and repair comply with instructions from Daikin and with applicable legislation (for example national gas regulation) and are executed ONLY by authorised persons.

4.1.3 To remove the accessories from the outdoor unit

In case of EPSKS04~07A*:

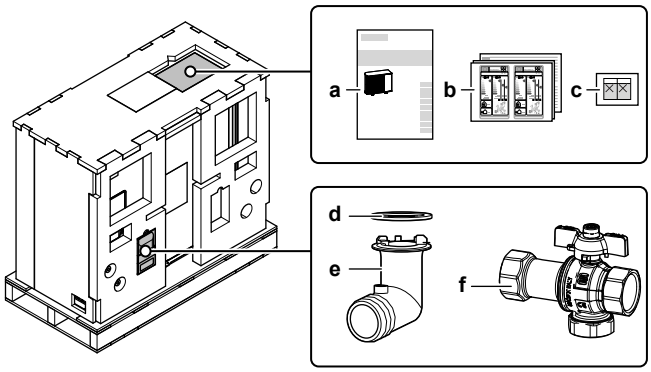

- **a** Installation manual – Outdoor unit
- **b** Energy label
- **c** "Do NOT turn OFF the circuit breaker" stickers
- **d** O-ring for drain socket
- **e** Drain socket
- **f** Shut-off valve (with integrated filter and check valve)

In case of EPSK06~14A*:

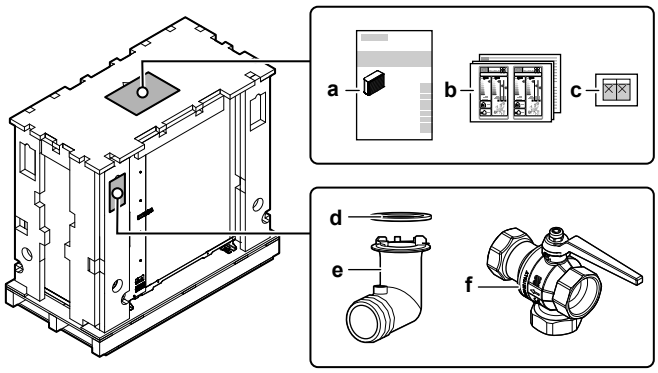

- **a** Installation manual – Outdoor unit
- **b** Energy label
- **c** "Do NOT turn OFF the circuit breaker" stickers
- **d** O-ring for drain socket
- **e** Drain socket
- **f** Shut-off valve (with integrated filter and check valve)

4.2 Indoor unit

4.2.1 To unpack the indoor unit

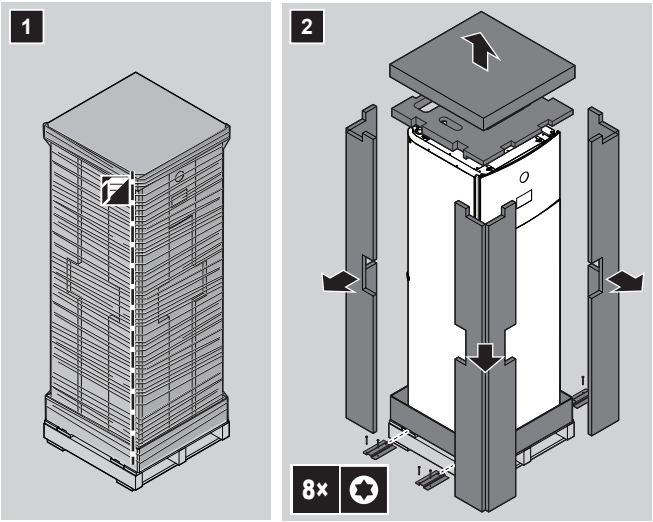

4.2.2 To remove the accessories from the indoor unit

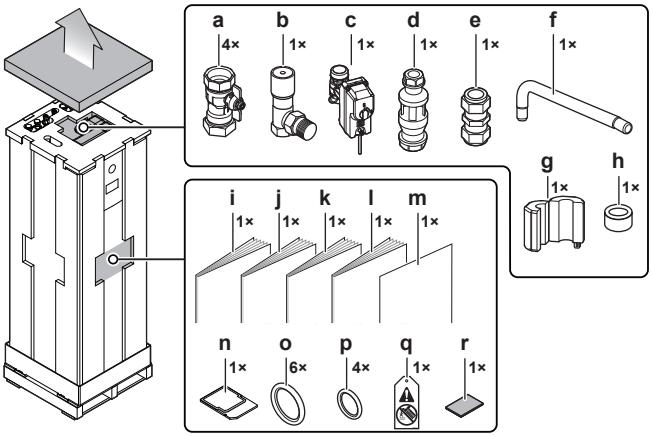

- **a** Shut-off valves for water circuit
- **b** Differential pressure bypass valve
- **c** Normally closed shut-off valve (inlet leak stop)
- **d** Tundish (to mount onto the pressure relief valve discharge pipe)
- **e** Brass compression coupler
- **f** Discharge pipe (for pressure relief valve)
- **g+h** Ferrite cores (only for EPVX10+14; to put on the Ethernet cable)
- **i** General safety precautions
- **j** Addendum book for optional equipment
- **k** Indoor unit installation manual
- **l** Operation manual
- **m** Addendum – Updating the BRC1HH* firmware
- **n** WLAN cartridge
- **o** Sealing rings for shut-off valves (space heating water circuit)
- **p** Sealing rings for field-supplied shut-off valves (domestic hot water circuit)
- **q** "No glycol" tag (to attach to the field piping near the filling point)
- **r** Sealing tape for low voltage wiring intake

4.2.3 To handle the indoor unit

Use the handles at the back and at the bottom to carry the unit.

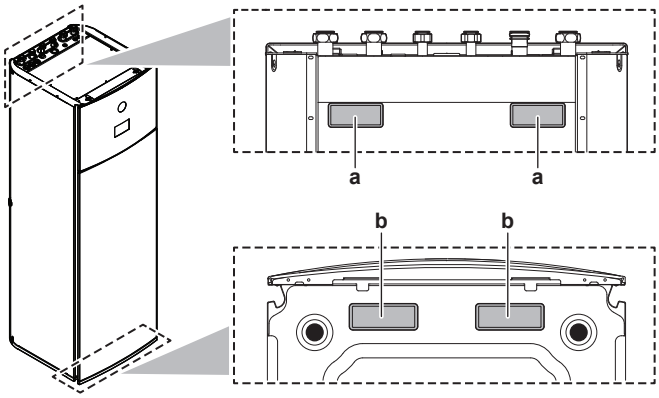

a Handles at the back of the unit
b Handles at the bottom of the unit. Carefully tilt the unit backwards so that the handles become visible.

4.3 Domestic hot water tank kit

4.3.1 To remove the accessories from the domestic hot water tank kit

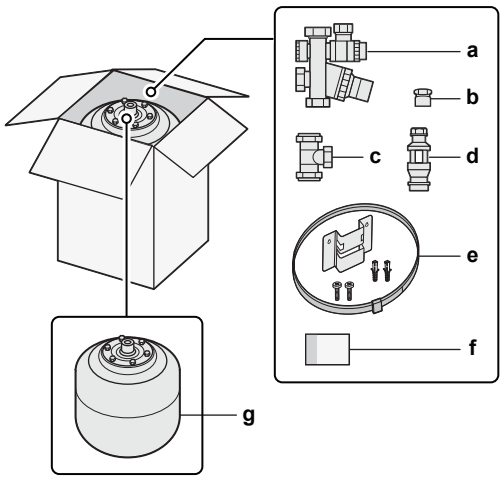

a Pressure reducing valve/pressure relief valve combination. Water inlet and water outlet 22 mm connection, discharge piping connection 15 mm
b Adaptor 22 mm×3/4" Female BSP
c T-piece 22 mm×22 mm×22 mm
d Tundish 15 mm inlet, 22 mm outlet
e Wall mounting set for expansion vessel
f Instruction sheet
g Expansion vessel of 18 l – 3/4" Male BSP

NOTICE

All piping MUST be installed according to section G3 of the Building Regulations.

4.4 Checklist for the required DHW accessories

For installation compliant with section G3 of the Building Regulations, you must verify that the following accessories are present.

Delivered with indoor unit:

☐	Tundish 15 mm inlet, 22 mm outlet

Delivered with domestic hot water tank kit:

☐	Pressure reducing valve/pressure relief valve combination
☐	Adaptor 22 mm×3/4" Female BSP
☐	T-piece 22 mm×22 mm×22 mm
☐	Tundish 15 mm inlet, 22 mm outlet
☐	Wall mounting set for expansion vessel
☐	Instruction sheet
☐	Expansion vessel of 18 l – 3/4" Male BSP

5 About the units and options

In this chapter

5.1 Identification 31
5.1.1 Identification label: Outdoor unit 31
5.1.2 Identification label: Indoor unit 31
5.2 Combining units and options 32
5.2.1 Possible combinations of indoor unit and outdoor unit 32
5.2.2 Possible options for the outdoor unit 32
5.2.3 Possible options for the indoor unit 33

5.1 Identification

5.1.1 Identification label: Outdoor unit

Location

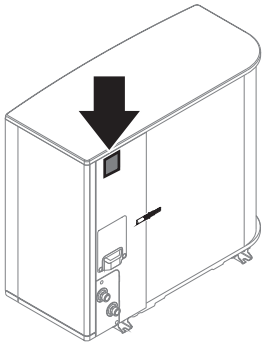

Model identification

Example: EP S K (S) 06 AR V3

Code	Explanation
EP	European hydro-split outdoor pair reversible
S	High water temperature – ambient zone 2 – low sound
K	Refrigerant R290
(S)	Small casing size
06	Capacity class
AR	Model series
V3	Power supply

5.1.2 Identification label: Indoor unit

Location

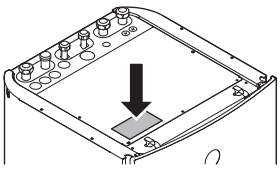

Model identification

Example: E PV X 10 S U 18 AJ 4V

Code	Description
E	European model
PV	Floor-standing indoor unit (hydro-split) with integrated tank
X	Reversible in heating/cooling
10	Capacity class
S	Integrated tank material: Stainless steel
U	UK model
18	Integrated tank volume
AJ	Model series
4V	Back-up heater model

5.2 Combining units and options

INFORMATION

Certain options may NOT be available in your country.

5.2.1 Possible combinations of indoor unit and outdoor unit

Indoor unit	Outdoor unit		
	EPSKS04~07A*	EPSK06~10A*	EPSK12+14A*
EPVX07	O	—	—
EPVX10	—	O	—
EPVX14	—	—	O

5.2.2 Possible options for the outdoor unit

Mounting stand (EKMST4 or EKMST5)

In colder regions where heavy snowfall can occur, it is recommended to install the outdoor unit on a mounting frame. Use the following model:

- For EPSK06~14A*: Use EKMST4 with rubber feet to install the outdoor unit on foundations where drilling is not allowed or possible, such as flat roofs or pavements.
- For EPSKS04~07A*: Use EKMST5 with rubber feet to install the outdoor unit on foundations where drilling is not allowed or possible, such as flat roofs or pavements.

For installation instructions, see the installation manual of the mounting stand.

Mounting stand cover (EKMSTC4 or EKMSTC5)

The mounting stand cover (EKMSTC4) can only be used in combination with the mounting stand (EKMST4).

The mounting stand cover (EKMSTC5) can only be used in combination with the mounting stand (EKMST5).

The aesthetic cover is designed to conceal the functional mounting stand, creating a unified appearance for the outdoor unit, mounting stand, and cover.

For installation instructions, see the installation manual of the mounting stand cover.

5.2.3 Possible options for the indoor unit

Multi-zoning wired controls

You can connect the following multi-zoning wired controls:

- Multi-zoning base unit 230 V (EKWUFHTA1V3)
- Digital thermostat 230 V (EKWCTRDI1V3)
- Analogue thermostat 230 V (EKWCTRAN1V3)
- Actuator 230 V (EKWCVATR1V3)

For installation instructions, see the installation manual of the control, and the addendum book for optional equipment.

Room thermostat (EKRTWA, EKRTRB)

You can connect an optional room thermostat to the indoor unit. This thermostat can either be wired (EKRTWA) or wireless (EKRTRB).

For installation instructions, see the installation manual of the room thermostat and addendum book for optional equipment.

Remote sensor for wireless thermostat (EKRTETS)

You can use the remote indoor temperature sensor (EKRTETS) only in combination with the wireless thermostat (EKRTRB).

For installation instructions, see the installation manual of the room thermostat and the addendum book for optional equipment.

Remote indoor sensor (KRCS01-1)

By default the internal sensor of the dedicated Human Comfort Interface (BRC1HHDA used as room thermostat) will be used as room temperature sensor.

As an option the remote indoor sensor can be installed to measure the room temperature on another location.

For installation instructions, see the installation manual of the remote indoor sensor and addendum book for optional equipment.

INFORMATION

- The remote indoor sensor can only be used in case the user interface is configured with room thermostat functionality.
- You can only connect either the remote indoor sensor or the remote outdoor sensor.

Remote outdoor sensor (EKRSCA1)

By default the sensor inside the outdoor unit will be used to measure the outdoor temperature.

As an option the remote outdoor sensor can be installed to measure the outdoor temperature on another location (e.g. to avoid direct sunlight) to have an improved system behaviour.

For installation instructions, see the installation manual of the remote outdoor sensor and the addendum book for optional equipment.

INFORMATION

You can only connect either the remote indoor sensor or the remote outdoor sensor.

PC cable (EKPCCAB4)

The PC cable gives the possibility to update the software of the hydro PCB. Use the PC cable to make a connection between the hydro PCB (A1P) of the indoor unit and a PC.

For installation instructions, see Installation manual of the PC cable.

Heat pump convector (FWX*)

For providing space heating/cooling, it is possible to use the following heat pump convectors:

- FWXV: floor-standing model
- FWXT: wall-mounted model
- FWXM: concealed model

For installation instructions, see:

- The installation manual of the heat pump convector
- The installation manual of the heat pump convector options
- The addendum book for optional equipment

Bizone kit (EKMIKPOA or EKMIKPHA)

You can install an optional bizone kit.

For installation instructions, see the installation manual of the bizone kit.

See also:

- "6.2.3 Multiple rooms – Two LWT zones" [▸ 53]
- [3.13] `Bizone kit` in the "Settings" chapter of the configuration reference guide

Human Comfort Interface (BRC1HHDA) used as room thermostat

- The Human Comfort Interface (HCI) used as room thermostat can only be used in combination with the user interface connected to the indoor unit.
- The Human Comfort Interface (HCI) used as room thermostat needs to be installed in the room that you want to control.

For installation instructions, see the installation and operation manual of the Human Comfort Interface (HCI) as room thermostat, and the addendum book for optional equipment.

Smart grid relay kit (EKRELSG)

The installation of the optional Smart grid relay kit is required in case of high voltage Smart grid contacts (EKRELSG).

For installation instructions, see "9.3.14 Smart Grid" [▸ 135].

Daikin Home Controls

Set of devices that allows to extend the capabilities of a Daikin Altherma unit to offer demand-based and room-by-room control of heating (and if supported by the unit, cooling) in the entire house, enabling living comfort. The following devices are available:

- DHC Access Point (EKRACPUR1PA, EKRACPUR1PU) or DHC Access Point 2 (EKRACPUR2PA, EKRACPUR2PU): Provides access to the ONECTA cloud and allows for configuration of the system through the ONECTA app.
- DHC Basic IO Box (EKRSIBDI1V3), DHC Multi IO Box (EKRMIBEV1V3): Allows for the connection of Daikin Altherma units to the Daikin Home Controls ecosystem and demand-based regulation of the room temperature.
- DHC Radiator Thermostat (EKRRVATR2BA, EKRRVATU1BA): Enables time-controlled regulation of the room temperature via a heating schedule with individual time slots.
- DHC Room Sensor (EKRSENDI1BA): Measures room temperature and humidity and transmits these values to the DHC Access Point and the ONECTA app.
- DHC Floor Heating Controller (EKRUFHT61V3): Allows for room-by-room control (up to 6 zones) of floor heating systems.
- DHC Room Thermostat (EKRCTRDI2BA, EKRCTRDI3BA): Measures the temperature and relative humidity in the room and enables time-controlled regulation of conventional radiators with DHC Radiator Thermostats, or underfloor heating in combination with DHC Floor Heating Controllers.

For installation instructions and application guidelines, see the installation manuals of the devices, as well as the application guide.

6 Application guidelines

In this chapter

6.1 Overview: Application guidelines ... 36
6.2 Setting up the space heating/cooling system ... 37
6.2.1 Single room ... 37
6.2.2 Multiple rooms – One LWT zone ... 42
6.2.3 Multiple rooms – Two LWT zones ... 53
6.3 Setting up an auxiliary heat source for space heating ... 57
6.4 Setting up the domestic hot water tank ... 61
6.4.1 System layout – Integrated DHW tank ... 61
6.4.2 Selecting the volume and desired temperature for the DHW tank ... 61
6.4.3 Setup and configuration – DHW tank ... 63
6.4.4 DHW pump for instant hot water ... 63
6.4.5 DHW pump for disinfection ... 64
6.4.6 DHW pump for instant hot water and disinfection ... 65
6.5 Setting up the power consumption control ... 65
6.5.1 Power limitation by smart meter ... 67
6.6 Setting up an external temperature sensor ... 67

6.1 Overview: Application guidelines

The purpose of the application guidelines is to give a glance of the possibilities of the heat pump system.

NOTICE

- The illustrations in the application guidelines are meant for reference only, and are NOT to be used as detailed hydraulic diagrams. The detailed hydraulic dimensioning and balancing are NOT shown, and are the responsibility of the installer.
- For more information about the configuration settings to optimize heat pump operation, see "10 Configuration" [▸ 142].

This chapter contains application guidelines for:

- Setting up the space heating/cooling system
- Setting up an auxiliary heat source for space heating
- Setting up the domestic hot water tank
- Setting up the power consumption control
- Setting up an external temperature sensor

NOTICE

Certain types of fan coil units –in this document referred to as "heat pump convectors"–, are able to receive input of the indoor unit operation mode cooling or heating (see "9.3.9 To connect the space cooling/heating ON/OFF output" [▶ 132] for main zone and additional zone. For these inputs and outputs there are `Field IO` connections (see "9.1.6 `Field IO` connections" [▶ 109]) where you can choose which terminal pins you want to use) and/or to send output of the heat pump convector thermostatic condition. See addendum book for optional equipment for correct reference (main zone: X42M/6 and X42M/7; for additional zone: X42M/6 and X42M/3).

The application guidelines illustrate the possibility of receiving or sending digital input/output. This functionality can only be used in case the heat pump convector has such features and the signals meet following requirements:

- Output of indoor unit (input to heat pump convector): cooling/heating signal=230 V (cooling=230 V, heating=0 V).
- Input to indoor unit (output of heat pump convector): thermostat ON/OFF signal=voltage-free contact (closed contact=thermo ON, open contact=thermo OFF).

6.2 Setting up the space heating/cooling system

The heat pump system supplies leaving water to heat emitters in one or more rooms.

Because the system offers a wide flexibility to control the temperature in each room, you need to answer the following questions first:

- How many rooms are heated or cooled by the heat pump system?
- Which heat emitter types are used in each room and what is their design leaving water temperature?

Once the space heating/cooling requirements are clear, we recommend to follow the setup guidelines below.

NOTICE

If an external room thermostat is used, the external room thermostat will control the room frost protection. However, the room frost protection is only activated when [3.4] `Antifrost` is activated.

6.2.1 Single room

Underfloor heating or radiators – Wired room thermostat

Setup

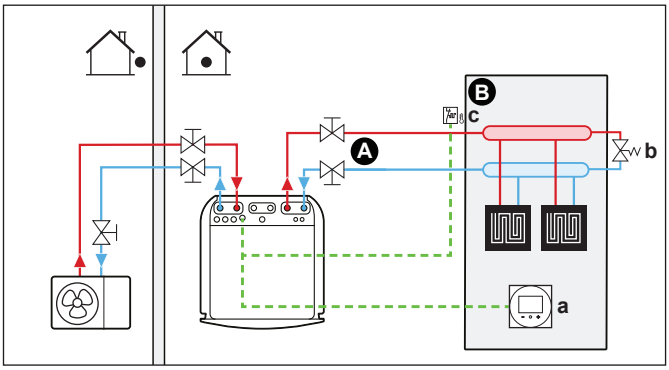

A Main leaving water temperature zone
B One single room

a Dedicated Human Comfort Interface (BRC1HHDA used as room thermostat)
b Bypass valve
c Safety thermostat (field supply)

- For more information about connecting the electrical wiring to the unit, see:
  - "9.2 Connections to the outdoor unit" [▸ 113]
  - "9.3 Connections to the indoor unit" [▸ 117]
- The underfloor heating or radiators are directly connected to the indoor unit.
- The room temperature is controlled by the dedicated Human Comfort Interface (BRC1HHDA used as room thermostat).

Configuration

Setting	Value
Unit temperature control: ▪ #: [1.12] ▪ Field setting code: 041	2 (`Room`): Unit operation is decided based on the ambient temperature of the dedicated Human Comfort Interface.
Number of water temperature zones: ▪ #: [3.6] ▪ Field setting code: 155	0 (`Additional zone`): Main zone only no additional zone
Safety thermostat: ▪ #: [13] ▪ Field setting code: Depends which terminal and pins you choose (see "18 Field settings table" [▸ 251] for more information).	9 (`Safety thermostat unit`) This is a `Field IO` connection (see "9.3.13 To connect the safety thermostat" [▸ 134]).

Benefits

- **Easy**. You can easily set the desired room temperature via the user interface:
  - For your daily needs, you can use preset values and schedules.
  - To deviate from your daily needs, you can temporarily overrule the preset values and schedules, or use the holiday mode.

Underfloor heating or radiators – Wireless room thermostat

Setup

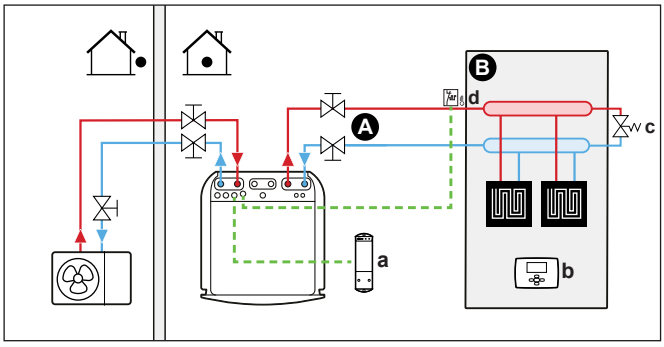

A Main leaving water temperature zone
B One single room
a Receiver for wireless external room thermostat
b Wireless external room thermostat
c Bypass valve
d Safety thermostat (field supply)

- For more information about connecting the electrical wiring to the unit, see:
  - "9.2 Connections to the outdoor unit" [▶ 113]
  - "9.3 Connections to the indoor unit" [▶ 117]
- The underfloor heating or radiators are directly connected to the indoor unit.
- The room temperature is controlled by the wireless external room thermostat (optional equipment EKRTRB).

Configuration

Setting	Value
Unit temperature control: ▪ #: [1.12] ▪ Field setting code: 041	1 (`External room thermostat`): Unit operation is decided by the external thermostat.
Number of water temperature zones: ▪ #: [3.6] ▪ Field setting code: 155	0 (`Additional zone`): Main zone only no additional zone
External room thermostat for the **main** zone: ▪ #: [1.13] ▪ Field setting code: 042	1 (`1 contact`): When the used external room thermostat or heat pump convector can only send a thermo ON/OFF condition. No separation between heating or cooling demand.
Safety thermostat: ▪ #: [13] Field setting code: Depends which terminal you choose (see "18 Field settings table" [▶ 251] for more information).	9 (`Safety thermostat unit`): This is a Field IO connection were you can choose which terminal and pins you want to use (see "9.3.13 To connect the safety thermostat" [▶ 134]).

Benefits

- **Wireless.** The Daikin external room thermostat is available in a wireless version.
- **Efficiency.** Although the external room thermostat only sends ON/OFF signals, it is specifically designed for the heat pump system.
- **Comfort.** In case of underfloor heating, the wireless external room thermostat prevents condensation on the floor during cooling operation by measuring the room humidity.

Heat pump convectors

Setup

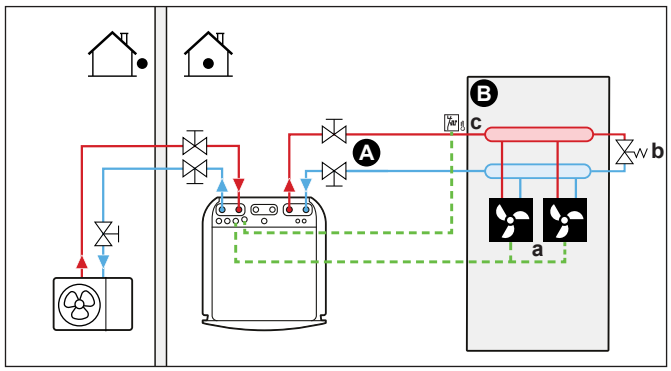

A Main leaving water temperature zone
B One single room

a Heat pump convectors (+ controllers)
b Bypass valve
c Safety thermostat (field supply)

- For more information about connecting the electrical wiring to the unit, see:
  - "9.2 Connections to the outdoor unit" [▸ 113]
  - "9.3 Connections to the indoor unit" [▸ 117]
- The heat pump convectors are directly connected to the indoor unit.
- The desired room temperature is set via the controller of the heat pump convectors. There are different controllers and setups possible for the heat pump convectors. For more information, see:
  - The installation manual of the heat pump convectors
  - The installation manual of the heat pump convector options
  - The addendum book for optional equipment
- The space heating/cooling demand signal is sent to one digital input on the indoor unit. See addendum book for optional equipment for the correct reference (main zone: X42M/6 and X42M/7; for additional zone: X42M/6 and X42M/3).
- The space operation mode is sent to the heat pump convectors by one digital output (see "9.3.9 To connect the space cooling/heating ON/OFF output" [▸ 132]) on the indoor unit. This is a `Field IO` connection (see "9.1.6 `Field IO` connections" [▸ 109]) where you can choose which terminal and pins you want to use.

Configuration

Setting	Value
Unit temperature control: ▪ #: [1.12] ▪ Field setting code: 041	1 (`External room thermostat`): Unit operation is decided by the external thermostat.
Number of water temperature zones: ▪ #: [3.6] ▪ Field setting code: 155	0 (`Additional zone`): Main zone only no additional zone
External room thermostat for the **main** zone: ▪ #: [1.13] ▪ Field setting code: 042	1 (`1 contact`): When the used external room thermostat or heat pump convector can only send a thermo ON/OFF condition. No separation between heating or cooling demand.
Safety thermostat: ▪ #: [13] Field setting code: Depends which terminal you choose (see "18 Field settings table" [▸ 251] for more information).	9 (`Safety thermostat unit`): This is a Field IO connection where you can choose which terminal and pins you want to use (see "9.3.13 To connect the safety thermostat" [▸ 134]).

Benefits

- **Cooling.** The heat pump convector offers, besides heating capacity, also excellent cooling capacity.
- **Efficiency.** Optimal energy efficiency because of the interlink function.
- **Stylish.**

Combination: Underfloor heating + Heat pump convectors

- Space heating is provided by:
  - The underfloor heating
  - The heat pump convectors
- Space cooling is provided by the heat pump convectors only. The underfloor heating is shut off by the shut-off valve.

Setup

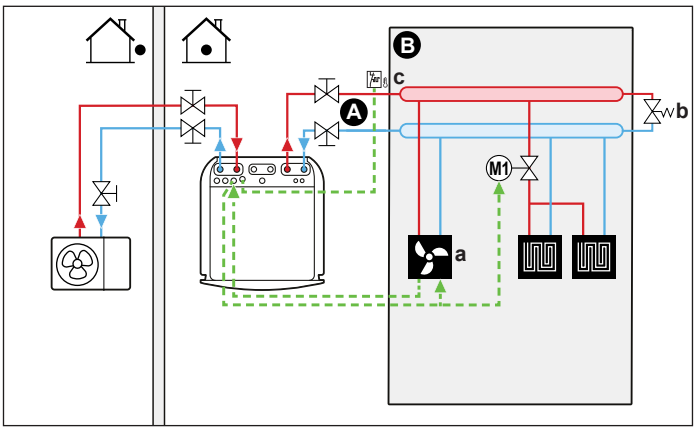

A Main leaving water temperature zone
B One single room
a Heat pump convectors (+ controllers)
b Bypass valve
c Safety thermostat (field supply)

- For more information about connecting the electrical wiring to the unit, see:
  - "9.2 Connections to the outdoor unit" [▶ 113]
  - "9.3 Connections to the indoor unit" [▶ 117]
- The heat pump convectors are directly connected to the indoor unit.
- A shut-off valve (field supply) is installed before the underfloor heating to prevent condensation on the floor during cooling operation.
- The desired room temperature is set via the controller of the heat pump convectors. There are different controllers and setups possible for the heat pump convectors. For more information, see:
  - The installation manual of the heat pump convectors
  - The installation manual of the heat pump convector options
  - The addendum book for optional equipment
- The space heating/cooling demand signal is sent to one digital input on the indoor unit. See addendum book for optional equipment for the correct reference (main zone: X42M/6 and X42M/7; for additional zone: X42M/6 and X42M/3).
- The space operation mode is sent by one digital output (see "9.3.9 To connect the space cooling/heating ON/OFF output" [▶ 132]) on the indoor unit to:
  - The heat pump convectors
  - The shut-off valve

    The signal closes the shut-off valve to prevent condensation on the floor during cooling.

  This is a `Field IO` connection (see "9.1.6 `Field IO` connections" [▶ 109]) where you can choose which terminal and pins you want to use.

Configuration

Setting	Value
Unit temperature control: ▪ #: [1.12] ▪ Field setting code: 041	1 (`External room thermostat`): Unit operation is decided by the external thermostat.
Number of water temperature zones: ▪ #: [3.6] ▪ Field setting code: 155	0 (`Additional zone`): Main zone only no additional zone
External room thermostat for the **main** zone: ▪ #: [1.13] ▪ Field setting code: 042	1 (`1 contact`): When the used external room thermostat or heat pump convector can only send a thermo ON/OFF condition. No separation between heating or cooling demand.
Safety thermostat: ▪ #: [13] Field setting code: Depends which terminal you choose (see "18 Field settings table" [▶ 251] for more information).	9 (`Safety thermostat unit`): This is a Field IO connection where you can choose which terminal and pins you want to use (see "9.3.13 To connect the safety thermostat" [▶ 134]).

Benefits

- **Cooling.** Heat pump convectors provide, besides heating capacity, also excellent cooling capacity.
- **Efficiency**. Underfloor heating has the best performance with the heat pump system.
- **Comfort.** The combination of the two heat emitter types provides:
  - The excellent heating comfort of the underfloor heating
  - The excellent cooling comfort of the heat pump convectors

6.2.2 Multiple rooms – One LWT zone

If only one leaving water temperature zone is needed because the design leaving water temperature of all heat emitters is the same, you do NOT need a mixing valve station (cost effective).

Example: If the heat pump system is used to heat up one floor where all the rooms have the same heat emitters.

NOTICE

It is possible to achieve room-by-room control by setting the Daikin Altherma unit temperature control for the desired zone (#: [1.12] and [1.13]) to `Leaving water`, in combination with separate room thermostats to regulate the flow in each room. However, this solution could lead to situations where there is space heating/cooling generation by the Daikin Altherma unit when there is no room that has any request for it. Contrarily, it is possible that no space cooling/heating is generated by the the Daikin Altherma unit while there are rooms with a request for it. Note that traditional room-based thermostats can also not be integrated in the ONECTA app.

To achieve more user-friendly and efficient demand-based, room-by-room control, integrate the Daikin Altherma unit into the Daikin Home Controls ecosystem. A DHC configuration requires the unit temperature control for the desired zone (#: [1.12] and [1.13]) to be set to `External room thermostat`. This allows the DHC ecosystem to request space/heating cooling demand when a room requires it. It is then possible to regulate the temperature for each room, using the ONECTA app to configure individual room setpoints or schedules.

For more information about room-by-room control and application examples, see the Daikin Home Controls application guide.

Underfloor heating or radiators – Thermostatic valves

If you are heating up rooms with underfloor heating or radiators, a very common way is to control the temperature of the main room by using a thermostat (this can either be the dedicated Human Comfort Interface (BRC1HHDA) or an external room thermostat), while the other rooms are controlled by so-called thermostatic valves, which open or close depending on the room temperature.

Setup

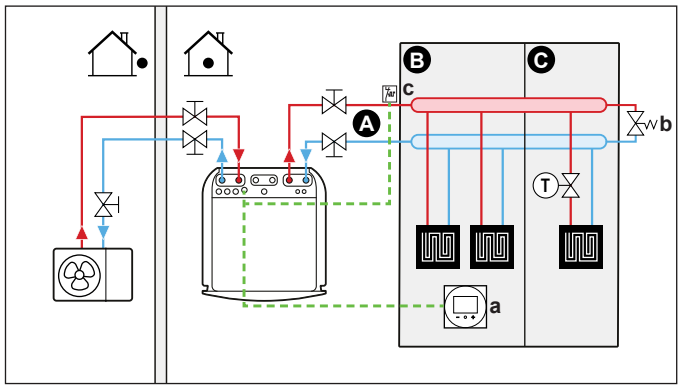

A Main leaving water temperature zone
B Room 1
C Room 2
a Dedicated Human Comfort Interface (BRC1HHDA used as room thermostat)
b Bypass valve
c Safety thermostat (field supply)

- For more information about connecting the electrical wiring to the unit, see:
  - "9.2 Connections to the outdoor unit" [▸ 113]
  - "9.3 Connections to the indoor unit" [▸ 117]
- A thermostatic valve is installed before the underfloor heating in each of the other rooms.

INFORMATION

Mind situations where the main room can be heated by another heating source. Example: Fireplaces.

Configuration

Setting	Value
Unit temperature control: ▪ #: [1.12] ▪ Field setting code: 041	2 (`Room`): Unit operation is decided based on the ambient temperature of the dedicated Human Comfort Interface.
Number of water temperature zones: ▪ #: [3.6] ▪ Field setting code: 155	0 (`Additional zone`): Main zone only no additional zone
Safety thermostat: ▪ #: [13] Field setting code: Depends which terminal you choose (see "18 Field settings table" [▸ 251] for more information).	9 (`Safety thermostat unit`): This is a Field IO connection where you can choose which terminal and pins you want to use (see "9.3.13 To connect the safety thermostat" [▸ 134]).

Benefits

- **Easy**. Same installation as for one room, but with thermostatic valves.

Underfloor heating or radiators – Multiple external room thermostats

Setup

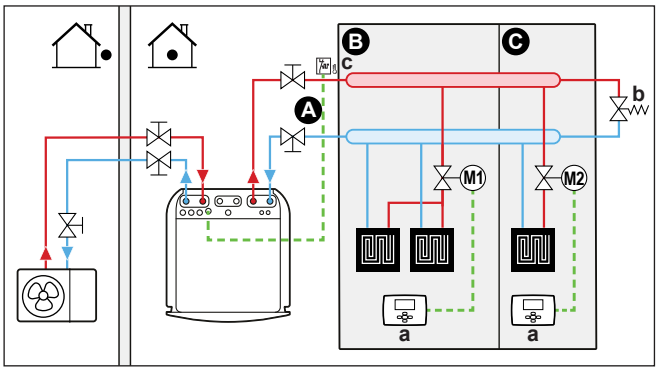

A Main leaving water temperature zone
B Room 1
C Room 2
a External room thermostat
b Bypass valve
c Safety thermostat (field supply)

- For more information about connecting the electrical wiring to the unit, see:
  - "9.2 Connections to the outdoor unit" [▸ 113]
  - "9.3 Connections to the indoor unit" [▸ 117]
- For each room, a shut-off valve (field supplied) is installed to avoid leaving water supply when there is no heating or cooling demand.
- A bypass valve must be installed to make water recirculation possible when all shut-off valves are closed. To guarantee reliable operation, provide a minimum water flow as described in table "To check the water volume and flow rate" in "8.1 Preparing water piping" [▸ 87].
- The user interface integrated in the indoor unit decides the space operation mode. Mind that the operation mode on each room thermostat must be set to match the indoor unit.

- The room thermostats are connected to the shut-off valves, but do NOT have to be connected to the indoor unit. The indoor unit will supply leaving water all the time, with the possibility to program a leaving water schedule.

Configuration

Setting	Value
Unit temperature control: ▪ #: [1.12] ▪ Field setting code: 041	0 (`Leaving water`): Unit operation is decided based on the leaving water temperature.
Number of water temperature zones: ▪ #: [3.6] ▪ Field setting code: 155	0 (`Additional zone`): Main zone only no additional zone
Safety thermostat: ▪ #: [13] Field setting code: Depends which terminal you choose (see "18 Field settings table" [▸ 251] for more information).	9 (`Safety thermostat unit`): This is a Field IO connection where you can choose which terminal and pins you want to use (see "9.3.13 To connect the safety thermostat" [▸ 134]).

Benefits

Compared with underfloor heating or radiators for one room:

- **Comfort.** You can set the desired room temperature, including schedules, for each room via the room thermostats.

Heat pump convectors – Multiple rooms

Setup

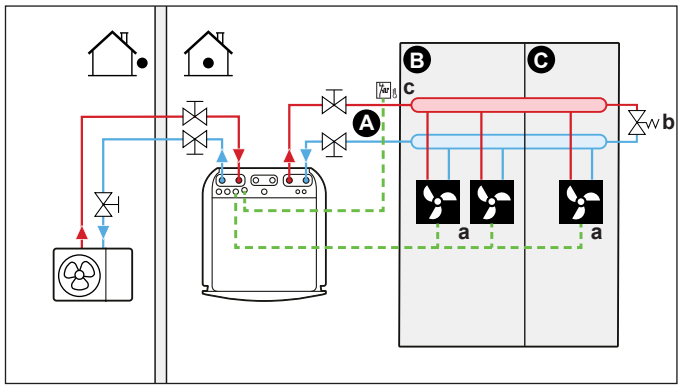

A Main leaving water temperature zone
B Room 1
C Room 2
a Heat pump convectors (+ controllers)
b Bypass valve
c Safety thermostat (field supply)

- For more information about connecting the electrical wiring to the unit, see:
  - "9.2 Connections to the outdoor unit" [▸ 113]
  - "9.3 Connections to the indoor unit" [▸ 117]

- The desired room temperature is set via the controller of the heat pump convectors. There are different controllers and setups possible for the heat pump convectors. For more information, see:
  - The installation manual of the heat pump convectors
  - The installation manual of the heat pump convector options
  - The addendum book for optional equipment
- The user interface integrated in the indoor unit decides the space operation mode.
- The heating or cooling demand signals of each heat pump convector are connected in parallel to the digital input on the indoor unit. See addendum book for optional equipment for the correct reference (main zone: X42M/6 and X42M/7; for additional zone: X42M/6 and X42M/3).The indoor unit will only supply leaving water temperature when there is an actual demand.

INFORMATION

To increase comfort and performance, we recommend to install the valve kit option EKVKHPC on each heat pump convector.

Configuration

Setting	Value
Unit temperature control: ▪ #: [1.12] ▪ Field setting code: 041	1 (`External room thermostat`): Unit operation is decided by the external thermostat.
Number of water temperature zones: ▪ #: [3.6] ▪ Field setting code: 155	0 (`Additional zone`): Main zone only no additional zone
Safety thermostat: ▪ #: [13] Field setting code: Depends which terminal you choose (see "18 Field settings table" [▸ 251] for more information).	9 (`Safety thermostat unit`): This is a Field IO connection where you can choose which terminal and pins you want to use (see "9.3.13 To connect the safety thermostat" [▸ 134]).

Benefits

Compared with heat pump convectors for one room:

- **Comfort.** You can set the desired room temperature, including schedules, for each room via the remote controller of the heat pump convectors.

Combination: Underfloor heating + Heat pump convectors – Multiple rooms

Setup

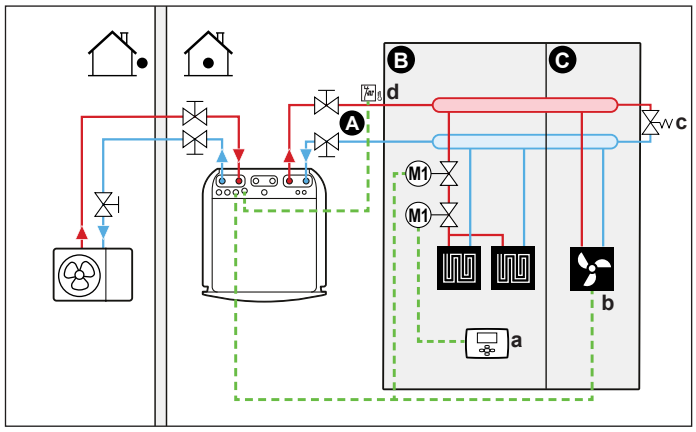

A Main leaving water temperature zone
B Room 1
C Room 2
a External room thermostat
b Heat pump convectors (+ controllers)
c Bypass valve
d Safety thermostat (field supply)

- For more information about connecting the electrical wiring to the unit, see:
  - "9.2 Connections to the outdoor unit" [▶ 113]
  - "9.3 Connections to the indoor unit" [▶ 117]
- For each room with heat pump convectors: The heat pump convectors are directly connected to the indoor unit.
- For each room with underfloor heating: Two shut-off valves (field supply) are installed before the underfloor heating:
  - A shut-off valve to prevent hot water supply when the room has no heating demand. The room thermostats are connected to the shut-off valves for the heating demand, but do NOT have to be connected to the indoor unit. The indoor unit will supply leaving water all the time, with the possibility to program a leaving water schedule.
  - A shut-off valve to prevent condensation on the floor during cooling operation of the rooms with heat pump convectors.
- The space operation mode is sent by one digital output (see "9.3.9 To connect the space cooling/heating ON/OFF output" [▶ 132]) on the indoor unit to:
  - The heat pump convectors
  - The shut-off valve

    The signal closes the shut-off valve to prevent condensation on the floor during cooling.

  This is a `Field IO` connection (see "9.1.6 `Field IO` connections" [▶ 109]) where you can choose which terminal and pins you want to use.
- For each room with heat pump convectors: The desired room temperature is set via the controller of the heat pump convectors. There are different controllers and setups possible for the heat pump convectors. For more information, see:
  - The installation manual of the heat pump convectors
  - The installation manual of the heat pump convector options
  - The addendum book for optional equipment

- For each room with underfloor heating: The desired room temperature is set via the external room thermostat (wired or wireless).
- The user interface integrated in the indoor unit decides the space operation mode. Mind that the operation mode on each external room thermostat and controller of the heat pump convectors must be set to match the indoor unit.

> **INFORMATION**
> To increase comfort and performance, we recommend to install the valve kit option EKVKHPC on each heat pump convector.

Configuration

Setting	Value
Unit temperature control: ▪ #: [1.12] ▪ Field setting code: 041	0 (`Leaving water`): Unit operation is decided based on the leaving water temperature.
Number of water temperature zones: ▪ #: [3.6] ▪ Field setting code: 155	0 (`Additional zone`): Main zone only no additional zone
Safety thermostat: ▪ #: [13] Field setting code: Depends which terminal you choose (see "18 Field settings table" [▶ 251] for more information).	9 (`Safety thermostat unit`): This is a Field IO connection where you can choose which terminal and pins you want to use (see "9.3.13 To connect the safety thermostat" [▶ 134]).

Two zones via shut-off valves

Setup

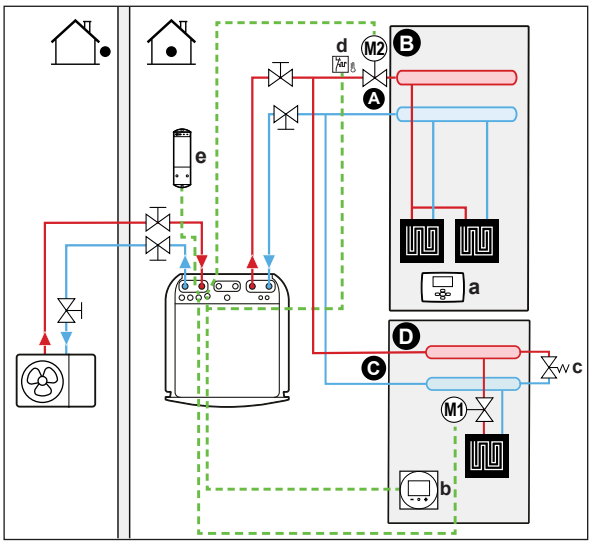

A Additional leaving water temperature zone
B Room 1
C Main leaving water temperature zone
D Room 2
a External room thermostat
b Dedicated Human Comfort Interface (BRC1HHDA used as room thermostat)
c Bypass valve
d Safety thermostat (field supply)
e Receiver for wireless external room thermostat

- For more information about connecting the electrical wiring to the unit, see:
  - "9.2 Connections to the outdoor unit" [▶ 113]
  - "9.3 Connections to the indoor unit" [▶ 117]
- For each floor with underfloor heating: The desired room temperature is set via the external room thermostat (wired or wireless).
- A bypass valve must be installed to make water recirculation possible when all shut-off valves are closed. To guarantee reliable operation, provide a minimum water flow as described in table "To check the water volume and flow rate" in "8.1 Preparing water piping" [▶ 87].
- For the main zone:
  - The room temperature is controlled by the dedicated Human Comfort Interface (BRC1HHDA used as room thermostat). It is recommended that the setpoint for the main zone and the additional zone be set to the same temperature and make sure NOT too low (typically: 20°C).
  - Ensure water circulation is possible in main zone when shut-off valves are closed.
- For the additional zone:
  - The room temperature is controlled by the wireless external room thermostat (optional equipment EKRTRB).
- In cooling mode, you can allow the underfloor heating (main or additional zone) to provide refreshment (no real cooling), or NOT allow it.
  - **If allowed:**

    For main zone: Install a shut-off valve (field supply) and connect it to the indoor unit (see "9.3.5 To connect the shut-off valve" [▶ 129]). The shut-off valve will close if the request of the main zone drops.

    For additional zone: Install a shut-off valve (field supply) and connect it to the indoor unit (see "9.3.5 To connect the shut-off valve" [▶ 129]). The shut-off valve will close if the request of the additional zone drops.
  - **If NOT allowed:**

    For main zone: Install a shut-off valve (field supply) and connect it to the indoor unit (see "9.3.5 To connect the shut-off valve" [▶ 129]). The shut-off valve will close if the request of the main zone drops or if cooling is requested.

    For additional zone: Install a shut-off valve (field supply) and connect it to the indoor unit (see "9.3.5 To connect the shut-off valve" [▶ 129]). The shut-off valve will close if the request of the additional zone drops or if cooling is requested.

    These connections are Field IO connections (see "9.1.6 `Field IO` connections" [▶ 109]) where you can choose which terminal and pins you want to use.

NOTICE

If there is a cooling request and the cooling allowance for that zone is OFF, the pump will not operate. However, if you want to enable cooling in that zone while keeping the pump running and only blocking the emitter which doesn't allow cooling via shut-off valve, you need to select the heating/cooling output for that valve in the Field IO (see "9.3.9 To connect the space cooling/heating ON/OFF output" [▶ 132]).

Configuration

Setting	Value
Unit temperature control main zone ▪ #: [1.12] ▪ Field setting code: 041	2 (`Room`): Unit operation is decided based on the ambient temperature of the dedicated Human Comfort Interface.
Additional zone: ▪ #: [2.12] Field setting code: 057	1 (`External room thermostat`): Unit operation is decided by the external thermostat.
In case of heat pump convectors: External room thermostat for the additional zone ▪ #: [2.13] ▪ Field setting code: 146	1 (`1 contact`): When the used external room thermostat or heat pump convector can only send a thermo ON/OFF condition. No separation between heating or cooling demand. This setting will be standard active.
Number of water temperature zones: ▪ #: [3.6] ▪ Field setting code: 155	1 (`Additional zone`): Main zone + additional zone
Shut-off valve ▪ #: [13] Field setting code: Depends which terminal and pins you choose (see "18 Field settings table" [▶ 251] for more information).	Main zone: 1 (`Main zone shut-off valve`) Additional zone: 2 (`Add. zone shut-off valve`) This is a `Field IO` connection (see "9.3.5 To connect the shut-off valve" [▶ 129])
Shut-off valve during cooling: Main zone: ▪ #: [1.16] ▪ Field setting code: 050 Additional zone: ▪ #: [2.33] ▪ Field setting code: 147	The shut off valve will close or not during cooling once this setting is ON or OFF for main or additional zone. **If NOT allowed:** 0 (`Cooling allowance`): Cooling allowance is OFF. Install a shut-off valve (field supply)(see "9.3.5 To connect the shut-off valve" [▶ 129]). **If allowed:** 1 (`Cooling allowance`) Cooling allowance is ON.
Safety thermostat: ▪ #: [13] Field setting code: Depends which terminal and pins you choose (see "18 Field settings table" [▶ 251] for more information).	9 (`Safety thermostat unit`) This is a `Field IO` connection (see "9.3.13 To connect the safety thermostat" [▶ 134]).

Benefits

- **Comfort.** The combination of the two heat emitter types provides:
  - The excellent heating comfort of the underfloor heating
  - The excellent cooling comfort of the heat pump convectors

- **Efficiency.**
  - Zones can be excluded if the requirement for this zone falls via shut-off valves.

Two zones via buffer vessel and 2 pumps

Setup

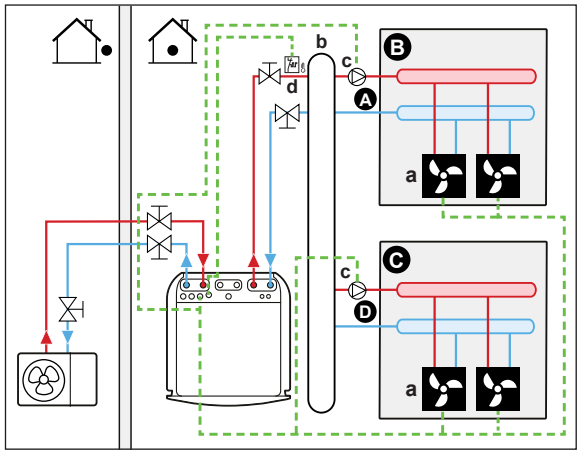

A Additional leaving water temperature zone
B Room 1
C Room 2
D Main leaving water temperature zone
a Heat pump convectors (+ controllers)
b Buffer vessel
c Pump
d Safety thermostat (field supply)

- For more information about connecting the electrical wiring to the unit, see:
  - "9.2 Connections to the outdoor unit" [▸ 113]
  - "9.3 Connections to the indoor unit" [▸ 117]
- For each room with heat pump convectors: The heat pump convectors are directly connected to the indoor unit.
- Install a buffer vessel (field supply) before the main and additional zone.
- For the main zone:
  - Install an external pump (field supply) in the main zone and connected to the indoor unit (see "9.3.6 To connect the pumps (DHW pump and/or external pumps)" [▸ 130]).
  - It is recommended that the setpoint for the main zone and the additional zone be set to the same temperature and make sure NOT too low (typically:20°C).
  - The desired room temperature is set via the controller of the heat pump convectors. There are different controllers and setups possible for the heat pump convectors. For more information, see:

    The installation manual of the heat pump convectors

    The installation manual of the heat pump convector options

    The addendum book for optional equipment
  - The heating or cooling demand signals of each heat pump convector are connected in parallel to the digital input on the indoor unit. See addendum book for optional equipment for the correct reference (main zone: X42M/6 and X42M/7; for additional zone: X42M/6 and X42M/3). The indoor unit will only supply the desired additional leaving water temperature when there is an actual demand.

- For the additional zone:
  - Install an external pump (field supply) in the additional zone and connected to the indoor unit (see "9.3.6 To connect the pumps (DHW pump and/or external pumps)" [▶ 130]).
  - The desired room temperature is set via the controller of the heat pump convectors. There are different controllers and setups possible for the heat pump convectors. For more information, see:

    The installation manual of the heat pump convectors

    The installation manual of the heat pump convector options

    The addendum book for optional equipment
  - The heating or cooling demand signals of each heat pump convector are connected in parallel to the digital input on the indoor unit. See addendum book for optional equipment for the correct reference (main zone: X42M/6 and X42M/7; for additional zone: X42M/6 and X42M/3). The indoor unit will only supply the desired additional leaving water temperature when there is an actual demand.

Configuration

Setting	Value
Unit temperature control main zone ▪ #: [1.12] ▪ Field setting code: 041	2 (`Room`): Unit operation is decided based on the ambient temperature of the dedicated Human Comfort Interface.
Additional zone: ▪ #: [2.12] Field setting code: 057	1 (`External room thermostat`): Unit operation is decided by the external thermostat.
In case of heat pump convectors: External room thermostat for the additional zone ▪ #: [2.13] ▪ Field setting code: 146	1 (`1 contact`): When the used external room thermostat or heat pump convector can only send a thermo ON/OFF condition. No separation between heating or cooling demand. This setting will be standard active.
Number of water temperature zones: ▪ #: [3.6] ▪ Field setting code: 155	1 (`Additional zone`): Main zone + additional zone
External pump main zone: ▪ #: [13] ▪ Field setting code: Depends which terminal and pins you choose (see "18 Field settings table" [▶ 251] for more information).	12 (`C/H pump ext. main`) This is a `Field IO` connection (see "9.3.6 To connect the pumps (DHW pump and/or external pumps)" [▶ 130])
External pump additional zone: ▪ #: [13] Field setting code: Depends which terminal and pins you choose (see "18 Field settings table" [▶ 251] for more information).	13 (`C/H pump ext. add.`) This is a `Field IO` connection (see "9.3.6 To connect the pumps (DHW pump and/or external pumps)" [▶ 130])

Setting	Value
Bizone system type ▪ #: [3.13.1] Field setting code: 008	1 (`Decoupled`)
Safety thermostat: ▪ #: [13] ▪ Field setting code: Depends which terminal and pins you choose (see "18 Field settings table" [▶ 251] for more information).	9 (`Safety thermostat unit`) This is a `Field IO` connection (see "9.3.13 To connect the safety thermostat" [▶ 134]).

NOTICE

If only one pump is included which is commonly used for the main or additional zone, then install a pump (field supply) and connect it to the correct `Field IO` ([13] - `C/H secondary pump`). The pump will be activated when there is a request from one of the zones (main or additional).

6.2.3 Multiple rooms – Two LWT zones

If the heat emitters selected for each room are designed for different leaving water temperatures, you can use different leaving water temperature zones (maximum 2).

In this document:

- Main zone = Zone with the lowest design temperature in heating, and the highest design temperature in cooling
- Additional zone = Zone with the highest design temperature in heating, and the lowest design temperature in cooling

NOTICE

It is possible to achieve room-by-room control by setting the Daikin Altherma unit temperature control for the desired zone (#: [1.12] and [1.13]) to `Leaving water`, in combination with separate room thermostats to regulate the flow in each room. However, this solution could lead to situations where there is space heating/cooling generation by the Daikin Altherma unit when there is no room that has any request for it. Contrarily, it is possible that no space cooling/heating is generated by the the Daikin Altherma unit while there are rooms with a request for it. Note that traditional room-based thermostats can also not be integrated in the ONECTA app.

To achieve more user-friendly and efficient demand-based, room-by-room control, integrate the Daikin Altherma unit into the Daikin Home Controls ecosystem. A DHC configuration requires the unit temperature control for the desired zone (#: [1.12] and [1.13]) to be set to `External room thermostat`. This allows the DHC ecosystem to request space/heating cooling demand when a room requires it. It is then possible to regulate the temperature for each room, using the ONECTA app to configure individual room setpoints or schedules.

For more information about room-by-room control and application examples, see the Daikin Home Controls application guide.

Typical example:

Room (zone)	Heat emitters: Design temperature
Living room (main zone)	Underfloor heating: ▪ In heating: 35°C ▪ In cooling[(a)]: 20°C (only refreshment, no real cooling allowed)

Room (zone)	Heat emitters: Design temperature
Bed rooms (additional zone)	Heat pump convectors: ▪ In heating: 45°C ▪ In cooling: 12°C

[a] In cooling mode, you can allow the underfloor heating (main zone) to provide refreshment (no real cooling), or NOT allow it. See setup below.

Setup

Three bizone kit system variations are possible:

1 System without hydraulic separator:

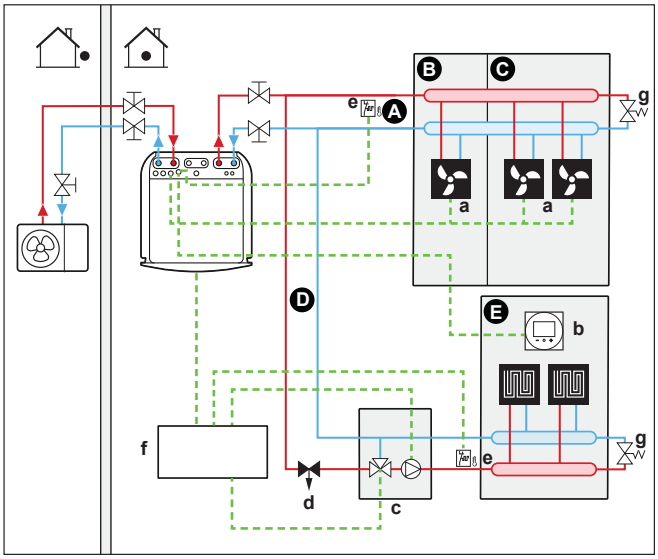

2 System with hydraulic separator for main zone:

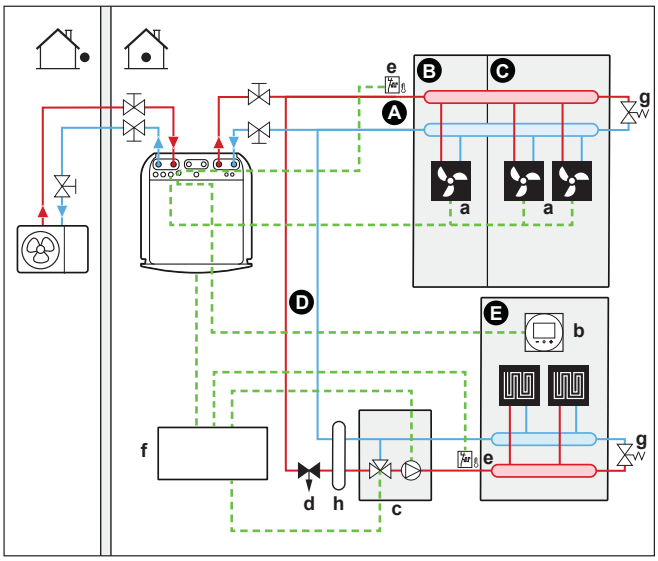

3 System with hydraulic separator for both zones:

For this system, a direct pump is required for the additional zone.

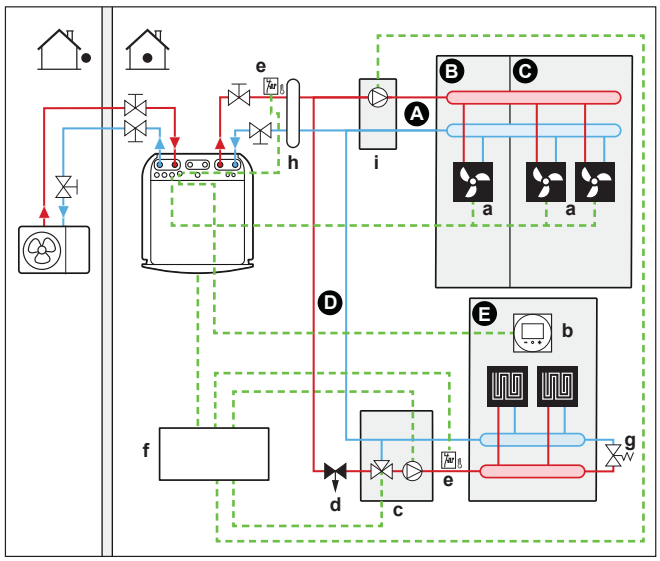

A Additional leaving water temperature zone
B Room 1
C Room 2
D Main leaving water temperature zone
E Room 3
a Heat pump convectors (+ controllers)
b Dedicated Human Comfort Interface (BRC1HHDA used as room thermostat)
c Mixing valve station
d Pressure regulating valve (field supply)
e Safety thermostat (field supply)
f Bizone kit control box (EKMIKPOA)
g Bypass valve
h Hydraulic separator (balancing bottle)
i Direct pump (for additional zone) (e.g. unmixed pump group EKMIKHUA)

- A bypass valve must be installed to make water recirculation possible when all shut-off valves are closed. To guarantee reliable operation, provide a minimum water flow as described in table "To check the water volume and flow rate" in "8.1 Preparing water piping" [▶ 87].
- For the main zone:
  - The mixing valve station (including pump + mixing valve) is installed before the underfloor heating.
  - The mixing valve station is controlled by the bizone kit controller (EKMIKPOA) based on the heating request of the room.
  - The room temperature is controlled by the dedicated Human Comfort Interface (BRC1HHDA used as room thermostat).
  - Ensure water circulation is possible in main zone when shut-off valves are closed
- For the additional zone:
  - The desired room temperature is set via the controller of the heat pump convectors. There are different controllers and setups possible for the heat pump convectors. For more information, see:

    The installation manual of the heat pump convectors

    The installation manual of the heat pump convector options

    The addendum book for optional equipment
  - The heating or cooling demand signals of each heat pump convector are connected in parallel to the digital input on the indoor unit. See addendum book for optional equipment for the correct reference (main zone: X42M/6 and X42M/7; for additional zone: X42M/6 and X42M/3). The indoor unit will only

supply the desired additional leaving water temperature when there is an actual demand.

- In cooling mode, you can allow the underfloor heating (main or additional zone) to provide refreshment (no real cooling), or NOT allow it.
  - **If allowed:**

    Do NOT install a shut-off valve.
  - **If NOT allowed:**

    For main zone: The pump of the mixing kit will not operate if the request of the main zone drops or if cooling is requested.

    For additional zone: Install a shut-off valve (field supply) when no direct pump (field supply) is connected. Connect the shut-off valve to the indoor unit (see "9.3.5 To connect the shut-off valve" [▶ 129]). The shut-off valve will close if the request of the additional zone drops or if cooling is requested. If a direct pump is installed, the pump will stop if the request of the additional zone drops or if cooling is requested. Connect the direct pump to the Bizone kit control box (EKMIKPOA).

    This connections are Field IO connections (see "9.1.6 `Field IO` connections" [▶ 109]) where you can choose which terminal pins you want to use.

> **NOTICE**
> When using high volume buffer vessels, it is NOT recommended to use normally open shut-off valves. When a communication error occurs, normally open shut-off valves will go into an open position, in which case it is possible that cold water can enter the circuit which does NOT allow cooling.

Configuration

Setting	Value
Unit temperature control main zone ▪ #: [1.12] ▪ Field setting code: 041	2 (`Room`): Unit operation is decided based on the ambient temperature of the dedicated Human Comfort Interface.
Additional zone: ▪ #: [2.12] Field setting code: 057	1 (`External room thermostat`): Unit operation is decided by the external thermostat.
In case of heat pump convectors: External room thermostat for the **additional** zone ▪ #: [2.13] Field setting code: 146	1 (`1 contact`): When the used external room thermostat or heat pump convector can only send a thermo ON/OFF condition. No separation between heating or cooling demand. This setting will be standard active.
Number of water temperature zones: ▪ #: [3.6] ▪ Field setting code: 155	1 (`Additional zone`): Main zone + additional zone
`Bizone kit installed`: ▪ #: [3.13.5] ▪ Field setting code: 099	1 (`Yes`)**:** A bizone kit is installed in order to add an additional temperature zone.

Setting	Value
`Bizone system type`: ▪ #: [3.13.1] ▪ Field setting code: 008	0 (`Not decoupled`): See system variation 1 described above 1 (`Decoupled`): See system variation 2 and 3 described above
Shut-off valve (if cooling is not allowed) ▪ #: [13] Field setting code: Depends on which terminal you choose (see "18 Field settings table" [▸ 251] for more information).	Additional zone: 2 (`Add. zone shut-off valve`) This is a Field IO connection where you can choose which terminal and pins you want to use (see "9.3.5 To connect the shut-off valve" [▸ 129]).
Pump during cooling for main zone: ▪ #: [1.16] ▪ Field setting code: 050 Pump or shut-off valve during cooling for additional zone: ▪ #: [2.33] ▪ Field setting code: 147	Main zone: the pump will stop during cooling if the cooling allowance for the main zone is OFF. Additional zone: the pump will stop or the shut-off valve will close during cooling if the cooling allowance for the main zone is OFF. **If NOT allowed:** 0 (`Cooling allowance`): Cooling allowance is OFF. **If allowed:** 1 (`Cooling allowance`) Cooling allowance is ON.
Safety thermostat main zone:	To be connected to the Bizone kit control box (EKMIKPOA).
Safety thermostat additional zone: ▪ #: [13] Field setting code: Depends on which terminal you choose (see "18 Field settings table" [▸ 251] for more information).	To be connected to the unit 9 (`Safety thermostat unit`): This is a Field IO connection where you can choose which terminal and pins you want to use (see "9.3.13 To connect the safety thermostat" [▸ 134]).

For more information on configuration of the bizone kit, see [3.13] `Bizone kit` in the "Settings" chapter of the configuration reference guide.

Benefits

- **Comfort.**
  - The combination of the two heat emitter systems provides the excellent heating comfort of the underfloor heating, and the excellent cooling comfort of the heat pump convectors.

6.3 Setting up an auxiliary heat source for space heating

INFORMATION

Bivalent is ONLY possible in case of ONE leaving water temperature zone with:

- room thermostat control, OR
- external room thermostat control.

- Space heating can be done by:
  - The indoor unit
  - An auxiliary boiler (field supply) connected to the system
- When there is a heating request, the indoor unit or the auxiliary boiler starts operating. Which of these units operates, depends on the outdoor temperature (status of the changeover to external heat source). When the permission is given to the auxiliary boiler, the space heating by the indoor unit is turned OFF.
- Domestic hot water is always produced by the DHW tank connected to the indoor unit.
- Bivalent operation is only possible if space heating is turned ON.

INFORMATION

- During heating operation of the heat pump, the heat pump operates to achieve the desired temperature set via the user interface. When weather-dependent operation is active, the water temperature is determined automatically depending on the outdoor temperature.
- During heating operation of the auxiliary boiler, the auxiliary boiler operates to achieve the desired water temperature set via the auxiliary boiler controller.
- Make sure the boiler target temperature is in line with the unit target temperature, which depends on the overheating setpoint.

INFORMATION

The maximum leaving water temperature is decided based on setting [3.12] `Overheating setpoint`. This limit defines the maximum leaving water **in the system**. Depending on the value of this setting, the maximum LWT setpoint will also be reduced by 5°C to allow stable control towards the setpoint.

The maximum leaving water temperature **in the main zone** is decided based on setting [1.19] `Overheating water circuit`, only in case [3.13.5] `Bizone kit installed` is enabled. This limit defines the maximum leaving water **in the main zone**. Depending on the value of this setting, the maximum LWT setpoint will also be reduced by 5°C to allow stable control towards the setpoint.

Setup

- Integrate the auxiliary boiler as follows:

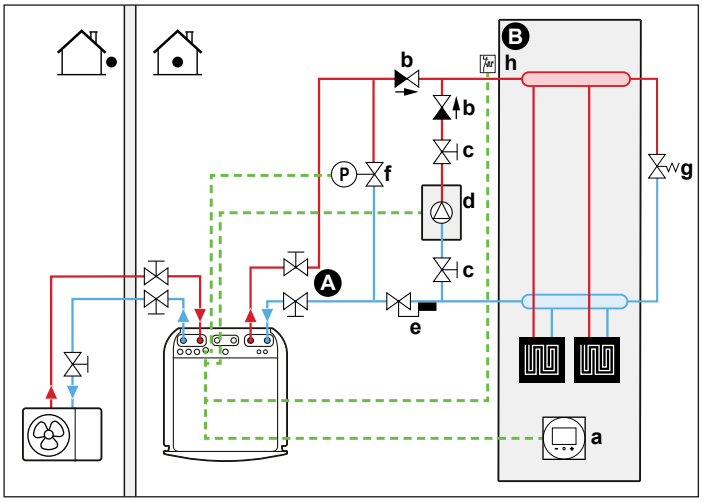

A Main leaving water temperature zone
B One single room
a Dedicated Human Comfort Interface (BRC1HHDA used as room thermostat)
b Non-return valve (field supply)
c Shut-off valve (field supply)
d Auxiliary boiler (field supply)
e Aquastat valve (field supply)

f Bypass valve controlled (field supply)
g Bypass valve mechanical (field supply)
h Safety thermostat (optional) (field supply)

NOTICE

- Make sure the auxiliary boiler and its integration in the system complies with applicable legislation.
- Daikin is NOT responsible for incorrect or unsafe situations in the auxiliary boiler system.

- Make sure the return water to the heat pump does NOT exceed 75°C. To do so:
  - Set the desired water temperature via the auxiliary boiler controller to maximum 75°C.
  - Install an aquastat valve in the return water flow of the heat pump. Set the aquastat valve to close above 75°C and to open below 75°C.
- Install non-return valves.
- An expansion vessel is already pre-mounted in the indoor unit. But for bivalent operation, also make sure that there is an expansion vessel in the auxiliary boiler loop. Otherwise when bivalent operation is running and if the Aquastat valve would close, there would be no expansion vessel in the water circuit anymore.
- Install a 2-way valve (bypass valve controlled by the indoor unit). See "9.3.11 To connect the bivalent bypass valve" [▸ 133]. This is a `Field IO` connection (`Bivalent bypass valve`).

  During bivalent operation of the auxiliary boiler and during the post-run time of the boiler pump (setting [5.14.6] `Post-run timer`, make sure this setting matches the post-run time of the boiler pump), the indoor unit will open this valve. When opened, the heat pump can bypass the auxiliary boiler, thereby maintaining the minimum water flow required for the water pipe freeze protection.
- The external heat source (auxiliary boiler) is controlled by the ON/OFF signal on the indoor unit. See "9.3.10 To connect the changeover to external heat source" [▸ 132]. This is a `Field IO` connection (see "9.1.6 `Field IO` connections" [▸ 109]) where you can choose which terminal and pins you want to use.
- To setup the heat emitters, see "6.2 Setting up the space heating/cooling system" [▸ 37].

Configuration

Setting	Value
Bivalent boiler: ▪ #: [5.37] Field setting code: 093	1 (`Bivalent present`): The bivalent boiler for space heating is installed and allowed to operate.
Hysteresis on the outdoor temperature: ▪ #: [5.14.4] Field setting code: 021	3 (`Bivalent hysteresis`): Hysteresis on the outdoor temperature for the changeover from heat pump to bivalent/tank boiler. Range 2~10°C, step range 1°C

Setting	Value
Operation range: ▪ #: [5.14.2] Field setting code: Lower temperature limit: 024 Higher temperature limit: 023	Lower temperature limit: 0 Higher temperature limit: 5 Choose the low and high outdoor temperature limit where the heat pump changeover to the auxiliary heat source. For more information see configuration reference guide.
Post-run timer: ▪ #: [5.14.6] Field setting code: 025	600 seconds (`Post-run timer`): Defines the minimum time the bivalent boiler pump in space heating stays on after the request has stopped. This timer is triggered from the moment bivalent is switched OFF. It prevents going to another mode as long as the timer is running. During this time the bivalent bypass valve remains open to ensure flow over the indoor unit. **Note:** It is possible that when two pumps operate in parallel circuits, one of the two circuits may experience no flow. This setting will have to be adapted according to the post-run timer of the boiler pump when the request stops. Please check with the boiler manufacturer for the correct value. Range 0~1500 seconds, step range 1 second
External heat source: ▪ #: [13] Field setting code: Depends which terminal and pins you choose (see "18 Field settings table" [▶ 251] for more information).	4 (`External heat source`) This is a `Field IO` connection (see "9.3.10 To connect the changeover to external heat source" [▶ 132])
Bivalent bypass valve: ▪ #: [13] Field setting code: Depends which terminal and pins you choose (see "18 Field settings table" [▶ 251] for more information).	9 (`Bivalent bypass valve`) This is a `Field IO` connection (see "9.3.11 To connect the bivalent bypass valve" [▶ 133])

Changeover to external heat source decided by an auxiliary contact

- The auxiliary contact can be:
  - An outdoor temperature thermostat
  - An electricity tariff contact
  - A manually operated contact
  - ...
- Setup: Connect the following field wiring:

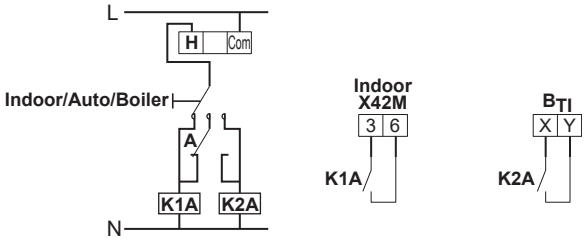

B_{TI}	Boiler thermostat input
A	Auxiliary contact (normally closed)
H	Heating demand room thermostat (optional)
K1A	Auxiliary relay for activation of indoor unit (field supply)
K2A	Auxiliary relay for activation of boiler (field supply)
Indoor	Indoor unit
Auto	Automatic
Boiler	Boiler

NOTICE

- Make sure the auxiliary contact has enough differential or time delay to prevent frequent changeover between indoor unit and auxiliary boiler.
- If the auxiliary contact is an outdoor temperature thermostat, install the thermostat in the shadow so that it is NOT influenced or turned ON/OFF by direct sunlight.
- Frequent changeover may cause corrosion of the auxiliary boiler. Contact the manufacturer of the auxiliary boiler for more information.

6.4 Setting up the domestic hot water tank

6.4.1 System layout – Integrated DHW tank

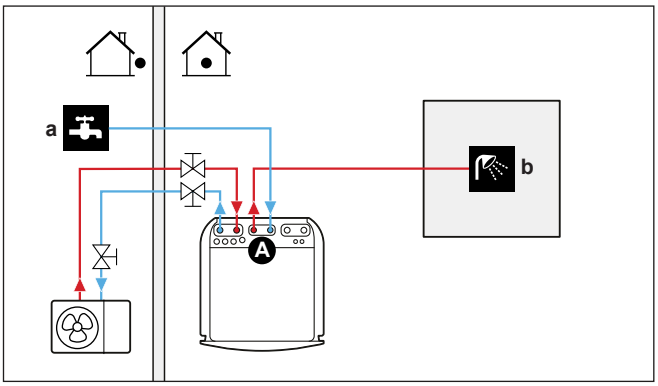

A	Domestic hot water
a	Cold water IN
b	Hot water OUT

6.4.2 Selecting the volume and desired temperature for the DHW tank

People experience water as hot when its temperature is 40°C. Therefore, the DHW consumption is always expressed as equivalent hot water volume at 40°C. However, you can set the DHW tank temperature at a higher temperature (example: 53°C), which is then mixed with cold water (example: 15°C).

Selecting the volume and desired temperature for the DHW tank consists of:

1. Determining the DHW consumption (equivalent hot water volume at 40°C).
2. Determining the volume and desired temperature for the DHW tank.

Determining the DHW consumption

Answer the following questions and calculate the DHW consumption (equivalent hot water volume at 40°C) using typical water volumes:

Question	Typical water volume
How many showers are needed per day?	1 shower = 10 min×10 l/min = 100 l
How many baths are needed per day?	1 bath = 150 l
How much water is needed at the kitchen sink per day?	1 sink = 2 min×5 l/min = 10 l
Are there any other domestic hot water needs?	—

Example: If the DHW consumption of a family (4 persons) per day is as follows:

- 3 showers
- 1 bath
- 3 sink volumes

Then the DHW consumption = (3×100 l)+(1×150 l)+(3×10 l)=480 l

Determining the volume and desired temperature for the DHW tank

Formula	Example
$V_1=V_2\times(T_2-T_1)/(40-T_1)$	If: ▪ V_2=180 l ▪ T_2=54°C ▪ T_1=15°C Then V_1=280 l
$V_2=V_1\times(40-T_1)/(T_2-T_1)$	If: ▪ V_1=480 l ▪ T_2=54°C ▪ T_1=15°C Then V_2=307 l

V_1 DHW consumption (equivalent hot water volume at 40°C)
V_2 Required DHW tank volume if only heated once
T_2 DHW tank temperature
T_1 Cold water temperature

Possible DHW tank volumes

Type	Possible volumes
Integrated DHW tank	▪ 180 l ▪ 230 l

Energy saving tips

- If the DHW consumption differs from day to day, you can program a weekly schedule with different desired DHW tank temperatures for each day.
- The lower the desired DHW tank temperature, the more cost effective. By selecting a larger DHW tank, you can lower the desired DHW tank temperature.
- The heat pump itself can produce domestic hot water of maximum 63°C (57°C if outdoor temperature is low). The electrical resistance integrated in the heat pump can increase this temperature. However, this consumes more energy.

We recommend to set the desired DHW tank temperature below 63°C to avoid using the electrical resistance.

- The higher the outdoor temperature, the better the performance of the heat pump.
  - If energy prices are the same during the day and the night, we recommend to heat up the DHW tank during the day.
  - If energy prices are lower during the night, we recommend to heat up the DHW tank during the night.
- When the heat pump produces domestic hot water, depending on total heating demand and the scheduled priority setting, it might not be able to heat up a space. In case you need domestic hot water and space heating at the same time, we recommend to produce the domestic hot water during the night when there is lower space heating demand or during the time when occupants are not present.

6.4.3 Setup and configuration – DHW tank

- For large DHW consumptions, you can heat up the DHW tank several times during the day.
- To heat up the DHW tank to the desired DHW tank temperature, you can use the following energy sources:
  - Thermodynamic cycle of the heat pump
  - Electrical backup heater

6.4.4 DHW pump for instant hot water

Setup

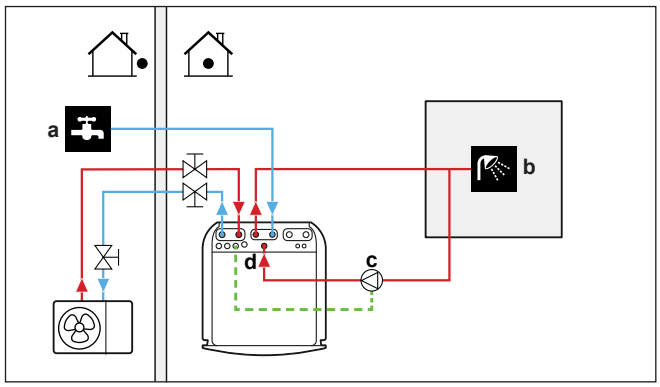

a Cold water IN
b Hot water OUT (shower (field supply))
c DHW pump (field supply)
d Recirculation connection

- By connecting a DHW pump, instant hot water can be available at the tap.
- The DHW pump and the installation are field supply and the responsibility of the installer. For the electrical wiring, see "9.3.6 To connect the pumps (DHW pump and/or external pumps)" [▸ 130].

Configuration

Setting	Value
DHW pump: ▪ #: [4.13] ▪ Field setting code: 149	1 (`Instant hot water`): DHW pump will start running when the instant hot water schedule is active.

- You can program a schedule to control the DHW pump via the user interface. For more information, see the configuration reference guide.

6.4.5 DHW pump for disinfection

Setup

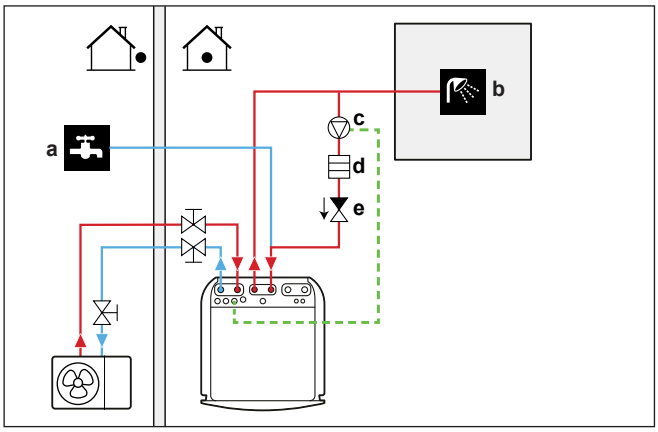

a Cold water IN
b Hot water OUT (shower (field supply))
c DHW pump (field supply)
d Heater element (field supply)
e Non-return valve (field supply)

- The DHW pump and the installation are field supply and the responsibility of the installer. For the electrical wiring, see "9.3.6 To connect the pumps (DHW pump and/or external pumps)" [▸ 130].
- If the applicable legislation requires a higher temperature than the maximum tank setpoint during disinfection (see field setting 073), you can connect a DHW pump and heater element as shown above.
- If applicable legislation requires disinfection of the water piping until the tapping point, you can connect a DHW pump and heater element (if needed) as shown above.

Configuration

Setting	Value
DHW pump: ▪ #: [4.13] ▪ Field setting code: 149	2 (`Disinfection`): DHW pump will start running when the disinfection operation is active

6.4.6 DHW pump for instant hot water and disinfection

Setup

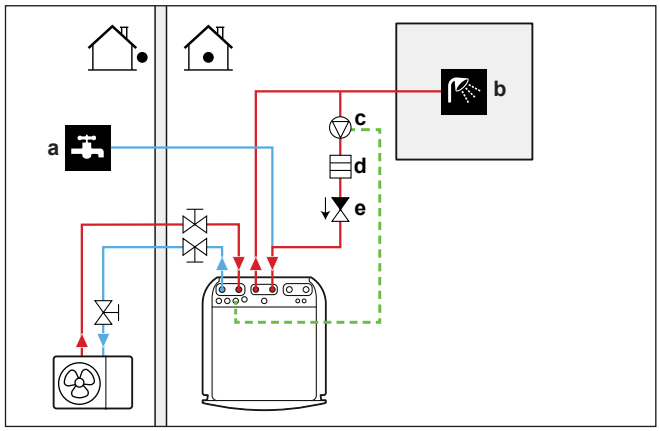

- **a** Cold water IN
- **b** Hot water OUT (shower (field supply))
- **c** DHW pump (field supply)
- **d** Heater element (field supply)
- **e** Non-return valve (field supply)

- The DHW pump and the installation are field supply and the responsibility of the installer. For the electrical wiring, see "9.3.6 To connect the pumps (DHW pump and/or external pumps)" [▸ 130].
- If the applicable legislation requires a higher temperature than the maximum tank setpoint during disinfection (see field setting 073), you can connect a DHW pump and heater element as shown above.
- If applicable legislation requires disinfection of the water piping until the tapping point, you can connect a DHW pump and heater element (if needed) as shown above.

Configuration

Setting	Value
DWH pump: ▪ #: [4.13] ▪ Field setting code: 149	3 (`Both`): DHW pump will start running when the disinfection operation is active or when the instant hot water schedule is active.

- You can program a schedule to control the DHW pump via the user interface. For more information, see the configuration reference guide.

6.5 Setting up the power consumption control

You can control power consumption by:

- Forced system limits
- Imposed power limits

Forced system limits

These limits are static. They are fixed values set in the user interface.

- `Legal limit` (e.g. BBR in Sweden)
- `System limit`
- `Outdoor unit fuse limit`

For more information, see the configuration reference guide ([9.15] `System limitations`).

NOTICE

Forced system limits. During maintenance mode:

- `Legal limit` and `System limit` are ignored.
- `Outdoor unit fuse limit` is NOT ignored.

Imposed power limits

These limits are dynamic.

NOTICE

Imposed power limit. You can define a maximum limit to the power consumption of the heat pump and the electrical heat sources in different ways.

1. Via hardware contact:

- Install a Smart Grid meter.

- Set [9.14.1] = `Smart Meter Contact`.

- Define the imposed power limit in [9.14.7] `Smart meter limit`.

2. Via Modbus:

- Use holding register 58: Imposed power limit.

3. Via Cloud: Momentarily, only available for business-to-business integrators. For more information, see https://developer.cloud.daikineurope.com.

- Use the ONECTA cloud API to define the imposed power limit.

Note:

- The imposed power limit can be ignored when the unit runs protective functions (defrost, water pipe freeze prevention, start-up control, maintenance mode).

- If the power limit is too strict to allow start-up or defrost operation, the heat pump will not operate.

- If the power limit is not too strict to allow start-up or defrost operation, the heat pump will operate. However, if the limit is exceeded for too long during operation modes other than start-up or defrost, the unit will stop operating.

- If the backup heater needs to support for protective reasons, the backup heater will kick in with at least a capacity of 2 kW (to ensure reliable operation) even if the power limit would be exceeded.

The imposed power limit command can come from multiple inputs:

- From a Smart Meter Contact control system.
- From an external communication input, like Modbus or Cloud. These inputs can come from, for example, some EMS (Energy Management Systems).

Note: The smart meter limit and the Modbus/Cloud limit cannot be combined.

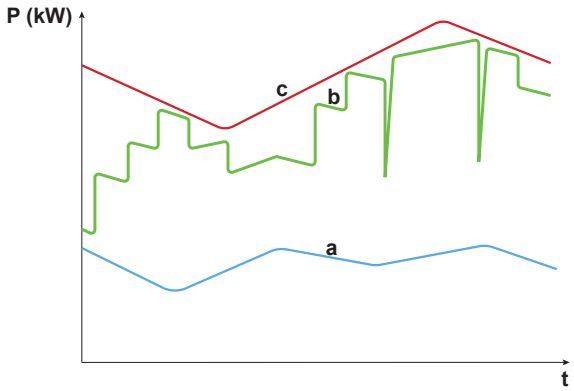

a Heat pump
b Backup heater

c Imposed power limit
t Time
P Power (kW)

The imposed power limit is applied dynamically. The moment that the limit is applied, the power consumption of the different heat sources is checked. Depending on the power consumption at that time, the heat source is enabled or disabled. All available heat sources are used as much as possible, up to the imposed limit value, based on different priority levels.

- Level 1 (high priority) = heat pump. This heat source is the most efficient.
- Level 2 (low priority) = backup heater.

6.5.1 Power limitation by smart meter

Power limitation is useful to assure a maximum power input of the system. In some countries, legislation limits the maximum power consumption for space heating, space cooling and DHW production.

The power or current of the entire system is limited dynamically by a digital Input. The power limitation level is set via the user interface.

Setup

- In case of low voltage Smart Grid meter no additional equipment needed.
- In case of high voltage Smart Grid meter. This requires the installation of **1 relay** from the Smart Grid relay kit (EKRELSG) (see "9.3.14 Smart Grid" [▸ 135]).

Configuration

Setting	Value
Operation mode: ▪ #: [9.14.1] ▪ Field setting code: 040	3 (`Smart Meter Contact`)
Smart meter limit: ▪ #: [9.14.7] ▪ Field setting code: 135	4.2 kW (`Smart meter limit`): Range 2~20 kW, step range 0.1 kW
Smart meter contact: ▪ #: [13] ▪ Field setting code: Depends which terminal and pins you choose (see "18 Field settings table" [▸ 251] for more information).	3 (`Smart Meter Contact`) This is a `Field IO` connection (see "9.3.14 Smart Grid" [▸ 135]).

The incoming `Smart Meter Contact` (see "9.3.14 Smart Grid" [▸ 135]) will activate a power limit which will reduce the heat pump power defined in [9.14.7] `Smart meter limit`.

6.6 Setting up an external temperature sensor

You can connect one external temperature sensor. It measures the indoor or outdoor ambient temperature. We recommend to use an external temperature sensor in the following cases:

Indoor ambient temperature

- In room thermostat control, the dedicated Human Comfort Interface (BRC1HHDA used as room thermostat) measures the indoor ambient temperature. Therefore, the Human Comfort Interface must be installed on a location:
  - Where the average temperature in the room can be detected
  - That is NOT exposed to direct sunlight
  - That is NOT near a heat source
  - That is NOT affected by outside air or air draught because of, for example, door opening/closing
- If this is NOT possible, we recommend to connect a remote indoor sensor (option KRCS01-1).
- Setup: For installation instructions, see the installation manual of the remote indoor sensor, and the addendum book for optional equipment.
- Configuration:

Setting	Value
External indoor sensor: ▪ #: [13] Field setting code: Depends which terminal you choose (see "18 Field settings table" [▸ 251] for more information).	2 (`External indoor sensor`): This is a Field IO connection where you can choose which terminal and pins you want to use (see "9.1.6 `Field IO` connections" [▸ 109]).
External room sensor offset ▪ #: [1.33]	0°C (`External room sensor offset`): Offset that can be applied to the room temperature, measured by the optional sensor. Range -5°C ~ 5°C, step range 0,5°C

Outdoor ambient temperature

- In the outdoor unit, the outdoor ambient temperature is measured. Therefore, the outdoor unit must be installed on a location:
  - At the north side of the house or at the side of the house where the most heat emitters are located
  - That is NOT exposed to direct sunlight
- If this is NOT possible, we recommend to connect a remote outdoor sensor (option EKRSCA1).
- Setup: For installation instructions, see the installation manual of the remote outdoor sensor, and the addendum book for optional equipment.
- Configuration:

Setting	Value
External outdoor sensor: ▪ #: [13] Field setting code: Depends which terminal you choose (see "18 Field settings table" [▸ 251] for more information).	1 (`External outdoor sensor`): This is a Field IO connection were you can choose which terminal and pins you want to use (see "9.1.6 `Field IO` connections" [▸ 109]).

Setting	Value
External ambient sensor offset ▪ #: [5.22] Field setting code: 175	0°C (`Ext. amb. sensor offset`): Offset that can be applied to the outdoor ambient temperature, measured by the optional sensor. Range -5°C ~ 5°C, step range 0,5°C

- If the desired leaving water temperature is weather dependent, the full time outdoor temperature measurement is important. This is another reason to install the optional outdoor ambient temperature sensor.

INFORMATION

The external outdoor ambient sensor data (either averaged or instantaneous) is used in the weather-dependent control curves and in the automatic heating/cooling changeover logic. To protect the outdoor unit, the internal sensor of the outdoor unit is always used.

7 Unit installation

In this chapter

7.1 Preparing the installation site 70
7.1.1 Installation site requirements of the outdoor unit 71
7.1.2 Additional installation site requirements of the outdoor unit in cold climates 72
7.1.3 Installation site requirements of the indoor unit 73
7.2 Opening and closing the units 74
7.2.1 About opening the units 74
7.2.2 To open the outdoor unit 74
7.2.3 To remove the transportation bolt (+ washer) 76
7.2.4 To close the outdoor unit 77
7.2.5 To open the indoor unit 78
7.2.6 To close the indoor unit 80
7.3 Mounting the outdoor unit 80
7.3.1 About mounting the outdoor unit 80
7.3.2 Precautions when mounting the outdoor unit 81
7.3.3 To provide the installation structure 81
7.3.4 To install the outdoor unit 82
7.3.5 To provide drainage 83
7.4 Mounting the indoor unit 85
7.4.1 About mounting the indoor unit 85
7.4.2 To install the indoor unit 85
7.4.3 To connect the drain hose to the drain 85

7.1 Preparing the installation site

WARNING

The appliance shall be stored in a room without ignition sources (neither permanent ignition sources nor ignition sources for a short period of time) (example: open flames, an operating gas appliance or an operating electric heater).

WARNING

The appliance shall be installed in an area without ignition sources (neither permanent ignition sources nor ignition sources for a short period of time) (example: open flames, an operating gas appliance or an operating electric heater).

NOTICE

The gas sensor in the outdoor unit, designed to detect R290 refrigerant leaks, is also sensitive to various other gases. To ensure accurate detection and prevent interference, keep the following substances away from the unit:

- Silicone glue, organic solvents, chlorine-based gases, alkali metals, and other inorganic compounds.
- Aromatic compounds such as benzene, toluene, and ortho-/para-xylene.

Choose an installation location with sufficient space to transport the unit in and out of the site.

Do NOT install the unit in places often used as work place. In case of construction works (e.g. grinding works) where a lot of dust is created, the unit MUST be covered.

WARNING

Make sure installation, servicing, maintenance and repair comply with instructions from Daikin and with applicable legislation (for example national gas regulation) and are executed ONLY by authorised persons.

7.1.1 Installation site requirements of the outdoor unit

> **INFORMATION**
> Also read the precautions and requirements in the "2 General safety precautions" [▶ 10].

Mind the spacing guidelines. See "16.1 Service space: Outdoor unit" [▶ 227].

The outdoor unit is designed for outdoor installation only, and for the following ambient temperatures:

Cooling mode	10~43°C
Heating mode	–28~25°C
Domestic hot water production	Up to 40°C

Make sure to comply with the following guidelines:

- Choose an installation location with sufficient space.
- Do NOT install the unit in locations often used as work location.
- Do NOT install the unit in locations near a road or parking area where it can be damaged by passing traffic.
- Do NOT install the unit in a basement.
- Do NOT install the unit in sound sensitive areas (e.g. near a bedroom), so that the operation noise will cause no trouble. **Note:** If the sound is measured under actual installation conditions, the measured value might be higher than the sound pressure level mentioned in Sound spectrum in the data book due to environmental noise and sound reflections.
- Do NOT install the unit in locations where a mineral oil mist, spray or vapour may be present in the atmosphere. Plastic parts may deteriorate and fall off or cause water leakage.

It is NOT recommended to install the unit in the following places because it may shorten the life of the unit:

- Where the voltage fluctuates a lot
- In vehicles or vessels
- Where acidic or alkaline vapour is present

Winds blowing against the outdoor unit's air in- and outlet causes short circuit (suction of discharge air). This may result in:

- drop of the operational capacity;
- additional backup heater consumption and usage is possible;
- increased frequency of frost formation on the outdoor heat exchanger;
- insufficient defrosting of the outdoor heat exchanger;
- a broken fan (if a strong wind blows continuously on the fan, it may start rotating very fast, until it breaks).

When installing the outdoor unit on a location that is unprotected from wind (e.g. a rooftop), install the outdoor unit so that the air in- and outlet is perpendicular to the main wind direction. If necessary, provide on-site measures for wind protection, e.g. walls, baffle plates etc.

Conditions: It is important to follow the restrictions of the minimum installation spacing guidelines. See "16.1 Service space: Outdoor unit" [▶ 227].

Two possible examples of on-site measures for wind protection are shown below.

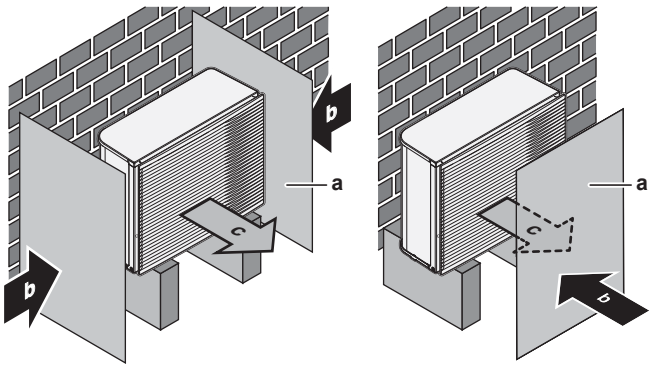

a Baffle plate
b Prevailing wind direction
c Air outlet

Seaside installation. Make sure the outdoor unit is NOT directly exposed to sea winds. This is to prevent corrosion caused by high levels of salt in the air, which might shorten the life of the unit.

Install the outdoor unit away from direct sea winds.

Example: Behind the building.

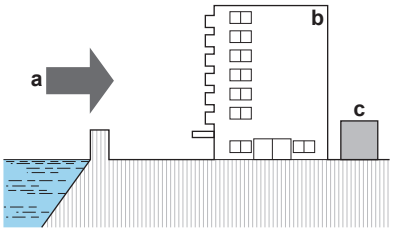

a Sea wind
b Building
c Outdoor unit

If the outdoor unit is exposed to direct sea winds, install a windbreaker.

- Height of windbreaker ≥1.5× height of outdoor unit
- Mind the service space requirements when installing the windbreaker.

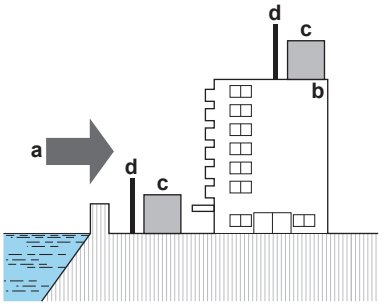

a Sea wind
b Building
c Outdoor unit
d Windbreaker

7.1.2 Additional installation site requirements of the outdoor unit in cold climates

Protect the outdoor unit against direct snowfall and take care that the outdoor unit is NEVER snowed up.

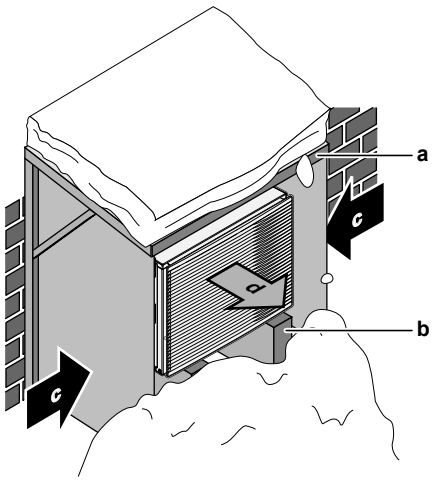

a Snow cover or shed
b Pedestal
c Prevailing wind direction
d Air outlet

In any case, provide at least 150 mm of free space below the unit. Additionally, make sure the unit is positioned at least 100 mm above the maximum expected level of snow. See "7.3 Mounting the outdoor unit" [▸ 80] for more details.

In heavy snowfall areas it is very important to select an installation site where the snow will NOT affect the unit. If lateral snowfall is possible, make sure that the heat exchanger coil is NOT affected by the snow. If necessary, install a snow cover or shed and a pedestal.

7.1.3 Installation site requirements of the indoor unit

INFORMATION

Also read the precautions and requirements in the "2 General safety precautions" [▸ 10].

- The indoor unit is designed for indoor installation only and for the following ambient temperatures:
  - Space heating operation: 5~30°C
  - Space cooling operation: 5~35°C
  - Domestic hot water production: 5~35°C
- Mind the measurement guidelines:

Maximum height difference between the indoor unit and the outdoor unit			10 m
Maximum water piping length (single run) between indoor unit and outdoor unit in case of…			
	EPSKS04+06		
		1" field piping	20 m[(a)]
	EPSKS07		
		1" field piping	7 m[(a)]
		1 1/4" field piping	20 m[(a)]

EPSK06~14A		
	1" field piping	5 m[(a)(b)]
	1 1/4" field piping	20 m[(a)(c)]
	1 1/2" field piping + V3 outdoor model (1N~)	30 m[(a)(c)]
	1 1/2" field piping + W1 outdoor model (3N~)	50 m[(a)(c)]

(a) The precise water piping length can be determined using the Hydronic Piping Calculation tool. The Hydronic Piping Calculation tool is part of the Heating Solutions Navigator which can be reached via https://professional.standbyme.daikin.eu. Contact your dealer if you have no access to the Heating Solutions Navigator.
(b) 6 bends
(c) 8 bends

- Mind the following spacing installation guidelines:

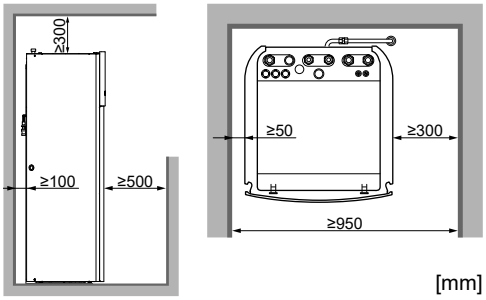

INFORMATION

If you have limited installation space, do the following before installing the unit in its final position: "7.4.3 To connect the drain hose to the drain" [▶ 85]. It requires to remove one or both side panels.

- The foundation must be strong enough to bear the weight of the unit. Take the weight of the unit with a domestic hot water tank full of water into account.

  Make sure, in the event of a water leak, water cannot cause any damage to the installation space and surroundings.

7.2 Opening and closing the units

7.2.1 About opening the units

At certain times, you have to open the unit. **Example:**

- When connecting the electrical wiring
- When maintaining or servicing the unit

DANGER: RISK OF ELECTROCUTION

Do NOT leave the unit unattended when the service cover is removed.

7.2.2 To open the outdoor unit

DANGER: RISK OF ELECTROCUTION

DANGER: RISK OF BURNING/SCALDING

In case of EPSKS04~07A*:

1 Open the screw of the top plate.

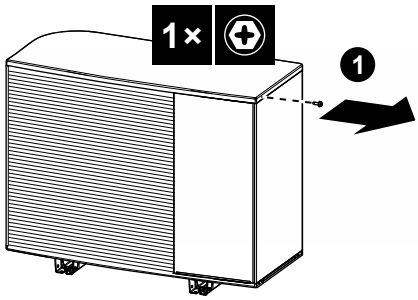

2 Lift the top plate slightly, then slide out the front plate and remove it.
Open the screws of the side plate

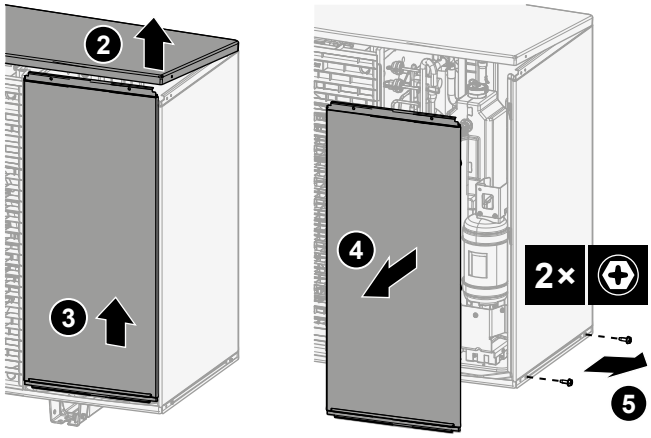

3 Slide out the side plate and remove it.

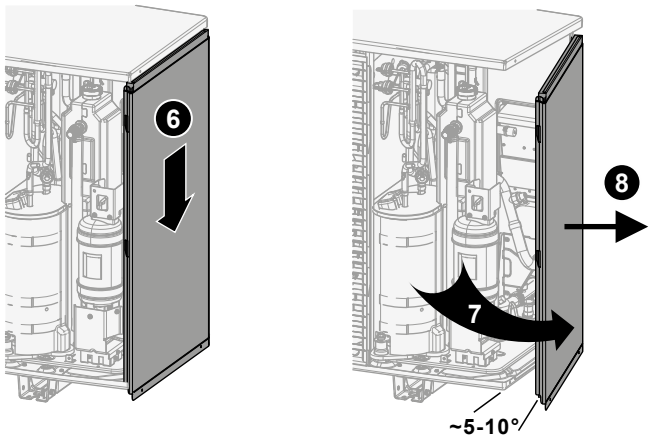

In case of EPSK06~14A*:

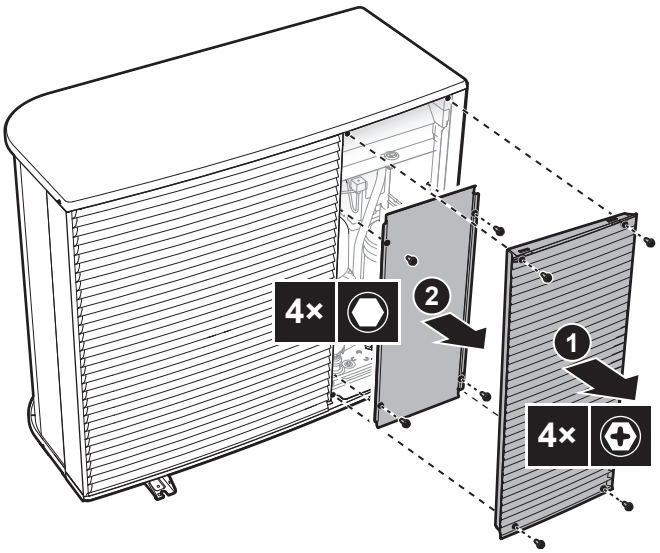

7.2.3 To remove the transportation bolt (+ washer)

The transportation bolt (+ washer) protects the unit during transport. During installation it must be removed (and disposed of).

In case of EPSK06~10A*:

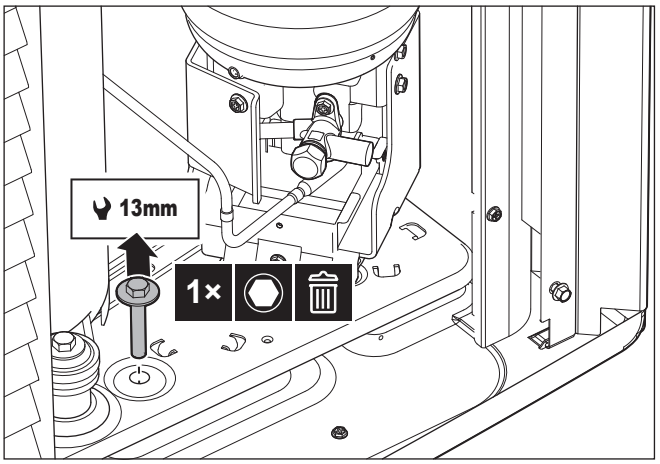

In case of EPSKS04~07A*:

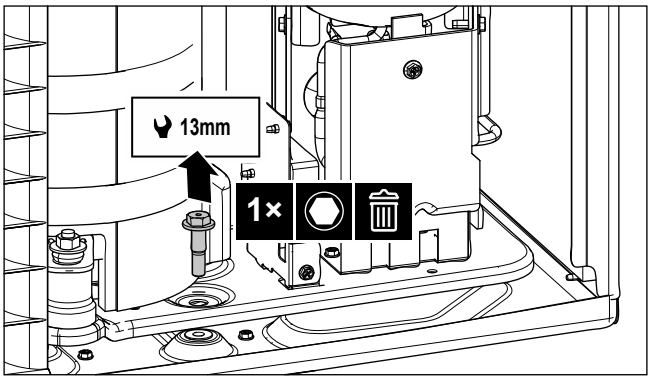

7.2.4 To close the outdoor unit

NOTICE

When closing the outdoor unit cover, make sure that the tightening torque does NOT exceed 4.1 N•m.

In case of EPSKS04~07A*:

1 Slide in the side panel.

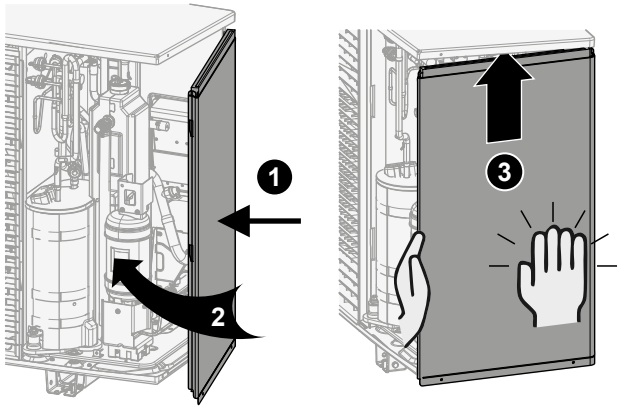

2 Close the screws of the side panel.

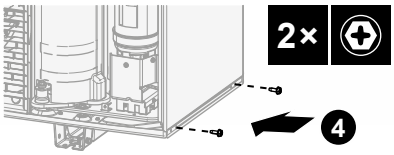

3 Slide in the front panel and close the top plate.

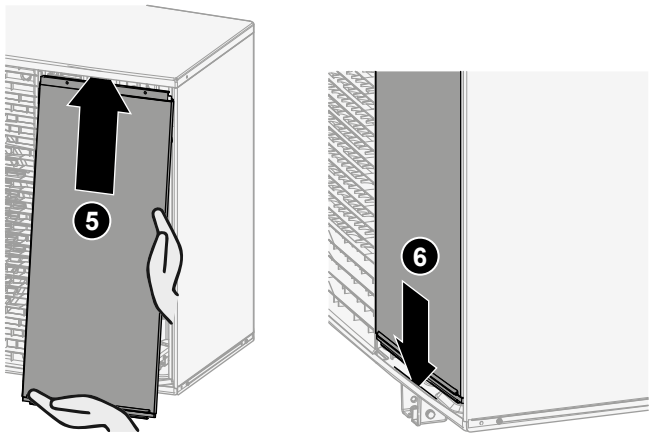

4 Close the screw of the top plate.

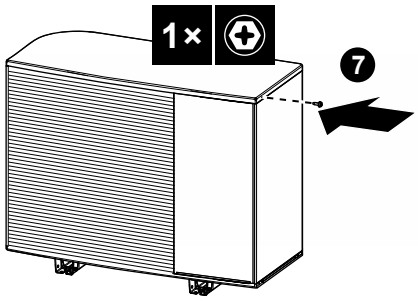

In case of EPSK06~14A*:

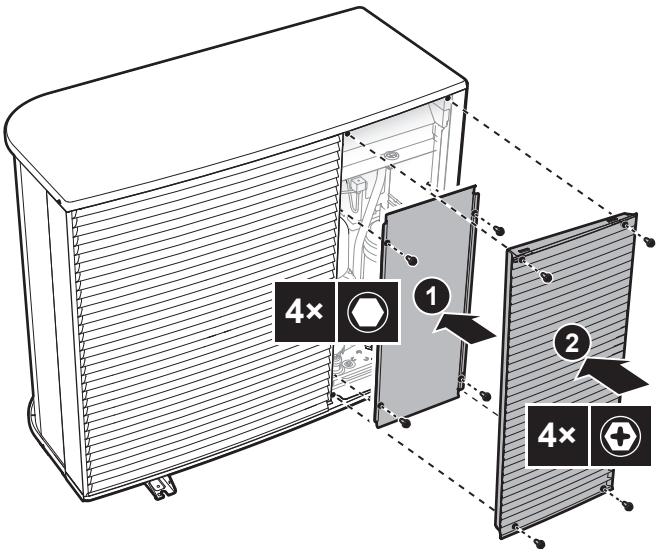

7.2.5 To open the indoor unit

Overview

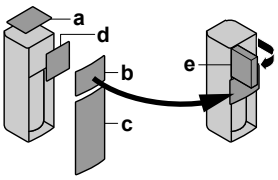

- **a** Top panel
- **b** User interface panel
- **c** Front panel
- **d** Switch box cover
- **e** Switch box

Open

1 Remove the top panel.

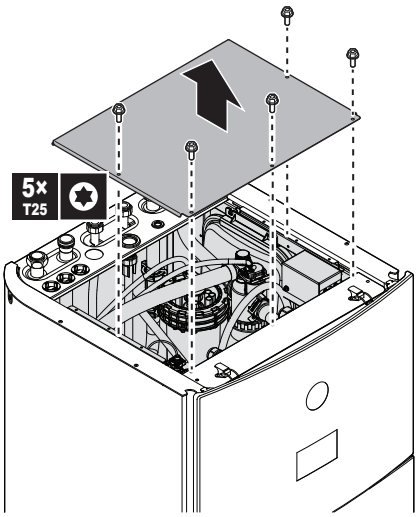

2 Remove the user interface panel. Open the hinges at the top and slide the top panel upwards. Temporary place the user interface panel on top of the unit.

NOTICE

- The wire harnesses and connectors that are connected to the user interface panel are fragile. Handle with care.
- When the user interface panel is removed, make sure it does not drop.

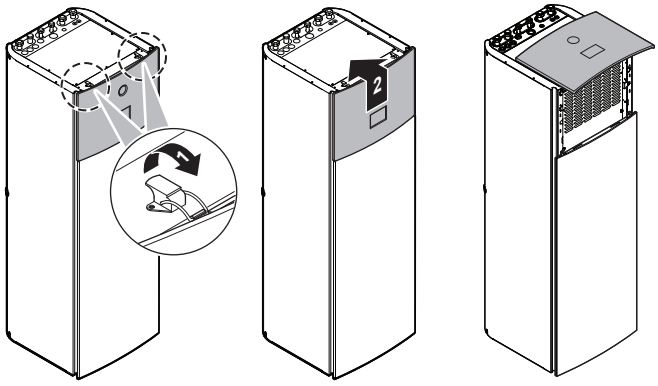

3 Remove the front plate.

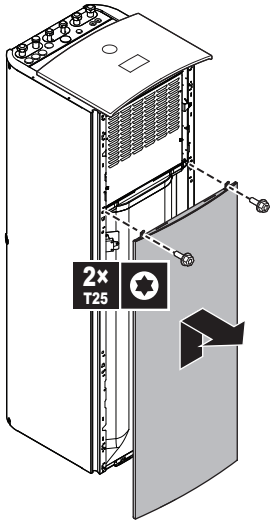

4 Attach the user interface panel to the front of the unit. (Not possible when you have to remove one of the side panels. See "7.4.3 To connect the drain hose to the drain" [▸ 85].)

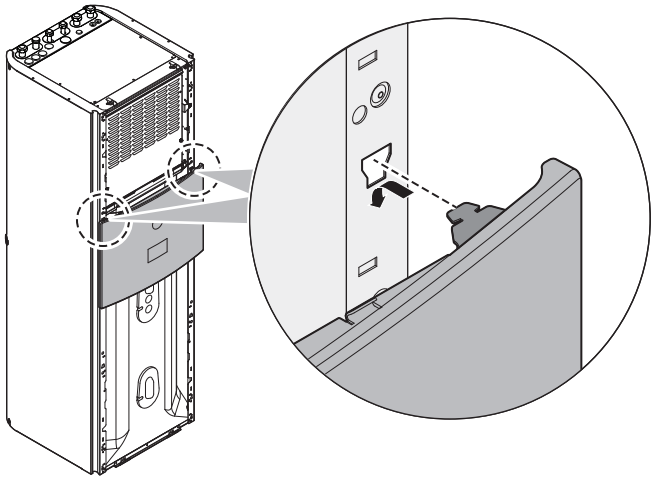

5 Remove the switch box cover.

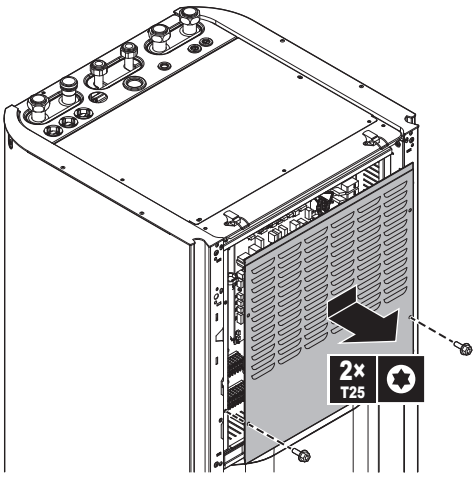

6 Rotate the switch box.

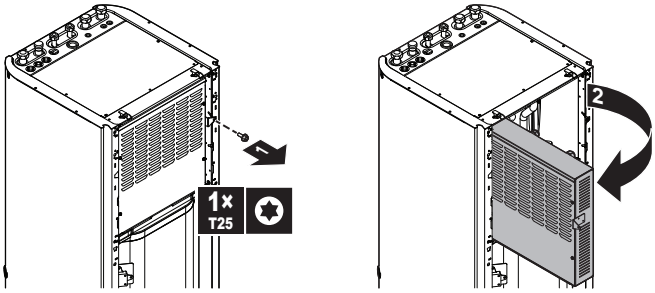

> **NOTICE**
> Do NOT put any force on the switch box to prevent the hinges from breaking. Do NOT put tools on it. Do NOT lean on it.

7.2.6 To close the indoor unit

1. Reinstall the switch box cover and close the switch box.
2. Reinstall the side panels.
3. Temporary place the user interface panel on top of the unit, then reinstall the front panel.
4. Reinstall the user interface panel.
5. Reinstall the top panel.

> **NOTICE**
> When closing the indoor unit, make sure that the tightening torque does NOT exceed 4.1 N•m.

7.3 Mounting the outdoor unit

7.3.1 About mounting the outdoor unit

When

You have to mount the outdoor and indoor unit before you can connect the water piping.

Typical workflow

Mounting the outdoor unit typically consists of the following stages:

1. Providing the installation structure.
2. Installing the outdoor unit.
3. Providing drainage.
4. Protecting the unit against snow and wind by installing a snow cover and baffle plates. See "7.1 Preparing the installation site" [▸ 70].

7.3.2 Precautions when mounting the outdoor unit

INFORMATION

Also read the precautions and requirements in the following chapters:

- "2 General safety precautions" [▸ 10]
- "7.1 Preparing the installation site" [▸ 70]

7.3.3 To provide the installation structure

Check the strength and level of the installation ground so that the unit will not cause any operating vibration or noise.

Fix the unit securely by means of foundation bolts in accordance with the foundation drawing.

NOTICE

Level. Make sure the unit is leveled in all directions. Recommended:

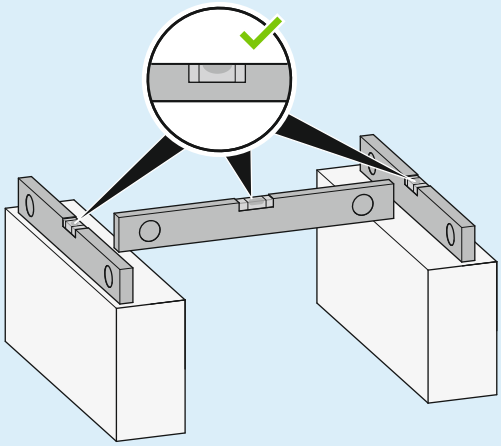

Use 4 sets of M12 anchor bolts, nuts and washers. Provide at least 150 mm of free space below the unit. Additionally, make sure the unit is positioned at least 100 mm above the maximum expected level of snow.

Anchor points + drain hole – In case of EPSKS04~07A*:

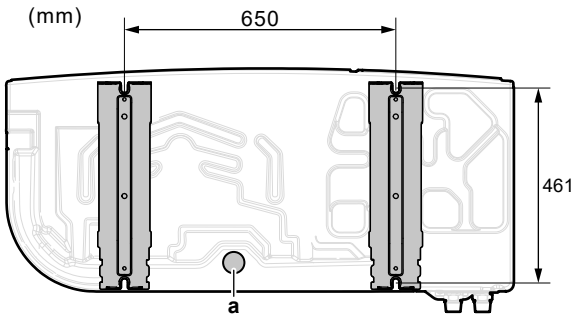

a Drain hole

Anchor points + drain hole – In case of EPSK06~14A*:

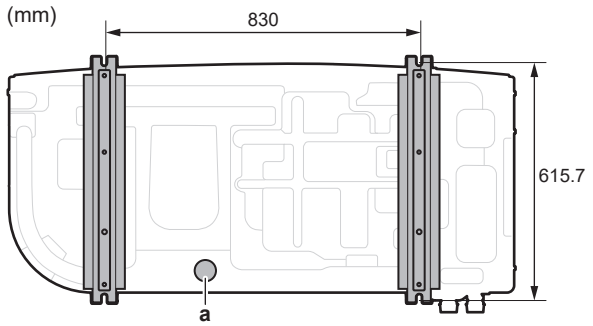

a Drain hole

Pedestal

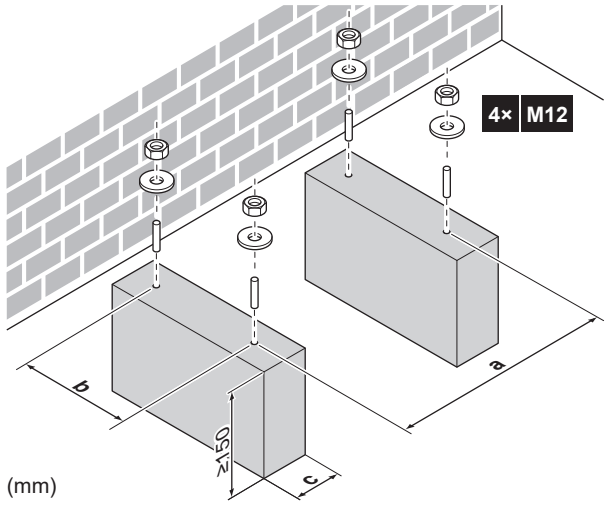

	EPSKS04~07A*	EPSK06~14A*
a	650	830
b	461	615.7
c	Make sure not to cover the drain hole in the bottom plate of the unit.	

7.3.4 To install the outdoor unit

CAUTION

To avoid injury, do NOT touch the air inlet or aluminium fins of the unit.

NOTICE

Do NOT pull the unit by the slings from the side.

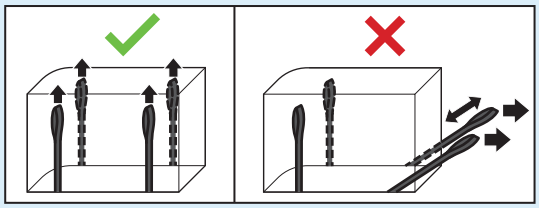

1 Carry the unit by its slings, and put it onto the installation structure.

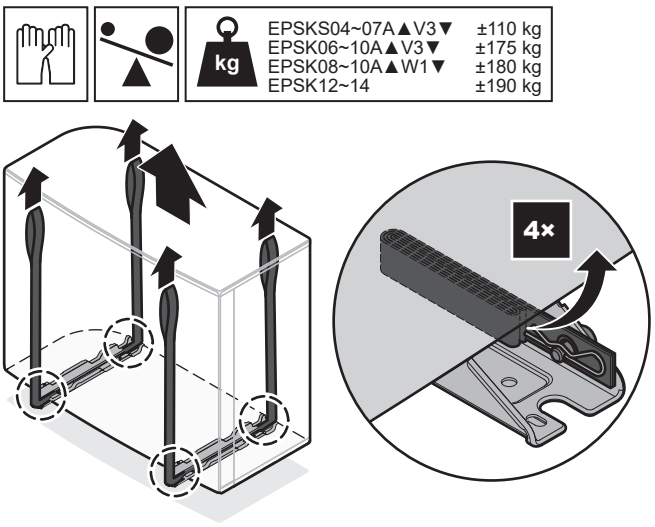

2 Fix the unit to the installation structure.

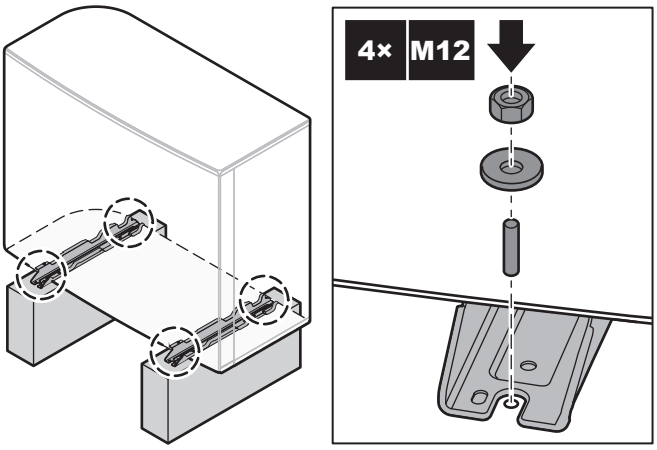

3 Remove the slings (+ clips + pins), and dispose of them.

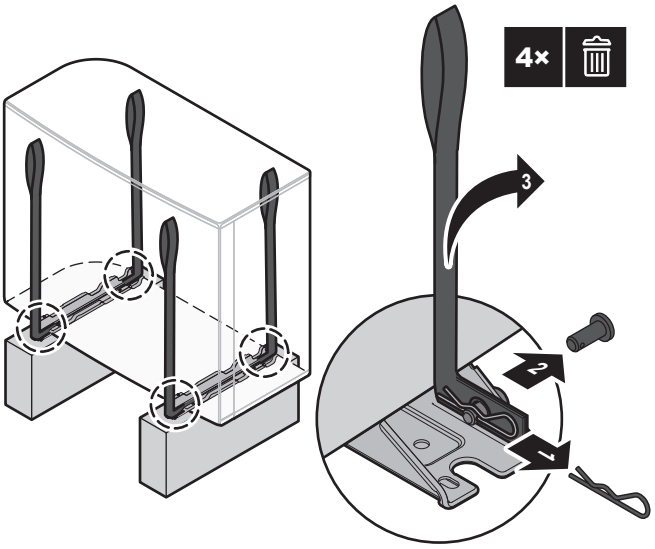

7.3.5 To provide drainage

- Make sure that condensation water can be evacuated properly.
- Install the unit on a base to make sure that there is proper drainage in order to avoid ice accumulation.
- Prepare a water drainage channel around the foundation to drain waste water away from the unit.

- Avoid drain water flowing over the footpath, so that it does NOT become slippery in case of ambient freezing temperatures.
- If you install the unit on a frame, install a waterproof plate within 150 mm of the bottom side of the unit in order to prevent water from getting into the unit and to avoid drain water dripping (see the following figure).

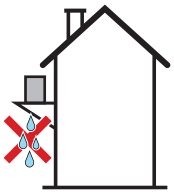

NOTICE

If the unit is installed in a cold climate, take adequate measures so that the evacuated condensate CANNOT freeze. We recommend to do the following:

- Insulate the drain hose.
- Install a drain tube heater (field supply). To connect the drain tube heater, see "9.2.2 To connect the electrical wiring to the outdoor unit" [▶ 114].

Use the drain plug (with O-ring) and a hose for drainage.

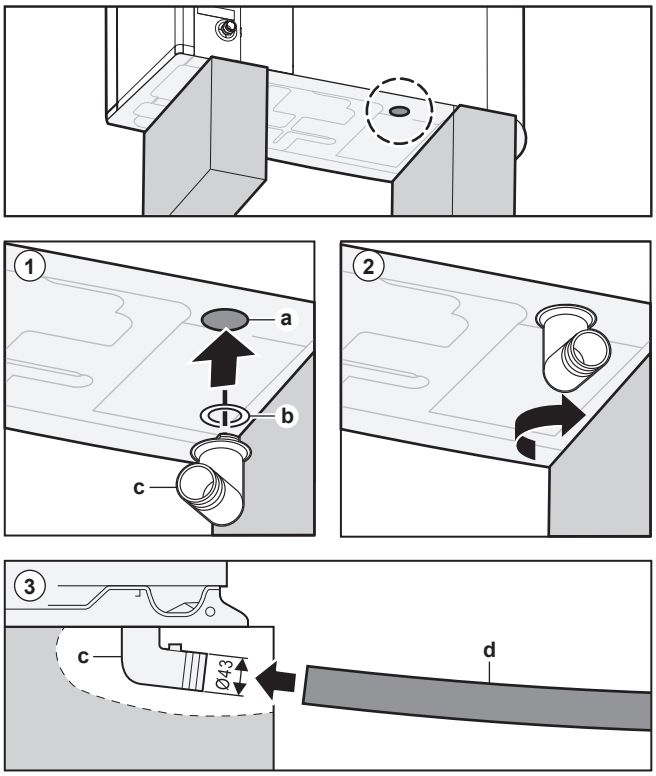

a Drain hole
b O-ring (delivered as accessory)
c Drain plug (delivered as accessory)
d Hose (field supply)

NOTICE

O-ring. Make sure the O-ring is installed correctly to prevent leakage.

7.4 Mounting the indoor unit

7.4.1 About mounting the indoor unit

When

You have to mount the outdoor and indoor unit before you can connect the water piping.

Typical workflow

Mounting the indoor unit typically consists of the following stages:

1 Installing the indoor unit.
2 Connecting the drain hose to the drain.

7.4.2 To install the indoor unit

1. Lift the indoor unit from the pallet and place it on the floor. Also see "4.2.3 To handle the indoor unit" [▸ 28].
2. Connect the drain hose to the drain. See "7.4.3 To connect the drain hose to the drain" [▸ 85].
3. Slide the indoor unit into position.
4. Adjust the height of the leveling feet to compensate for floor irregularities. The maximum allowed deviation is 1°.

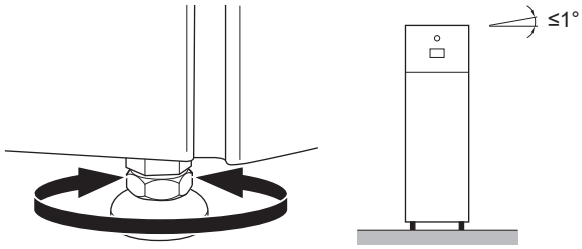

NOTICE

Do NOT tilt the unit forwards:

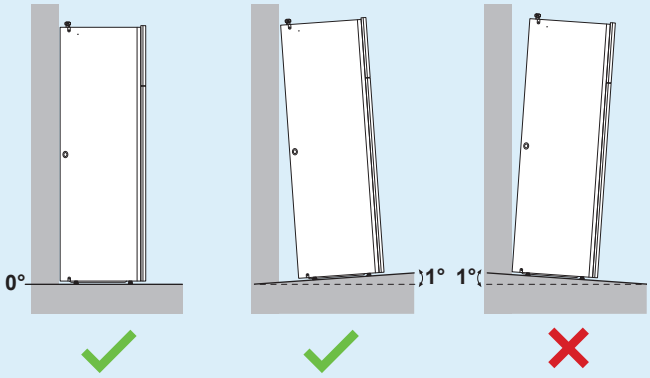

7.4.3 To connect the drain hose to the drain

Water coming from the pressure relief valve is collected in the drain pan. The drain pan is connected to a drain hose inside the unit. Connect the drain hose to an appropriate drain according to the applicable legislation. You can route the drain hose through the left or right side panel.

Prerequisite: The user interface panel and front panel have been removed.

1. Remove one of the side panels.

2 Cut out the rubber grommet.

3 Pull the drain hose through the hole.

4 Reattach the side panel. Ensure the water can flow through the drain tube.

It is recommended to use a tundish to collect the water.

Option 1: Through the left side panel

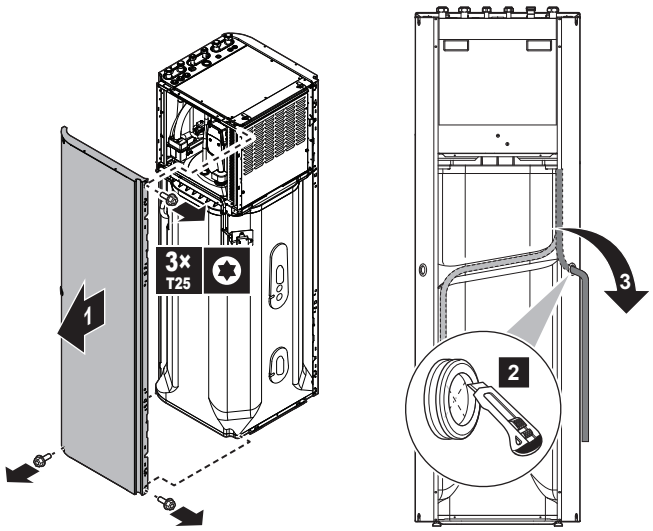

Option 2: Through the right side panel

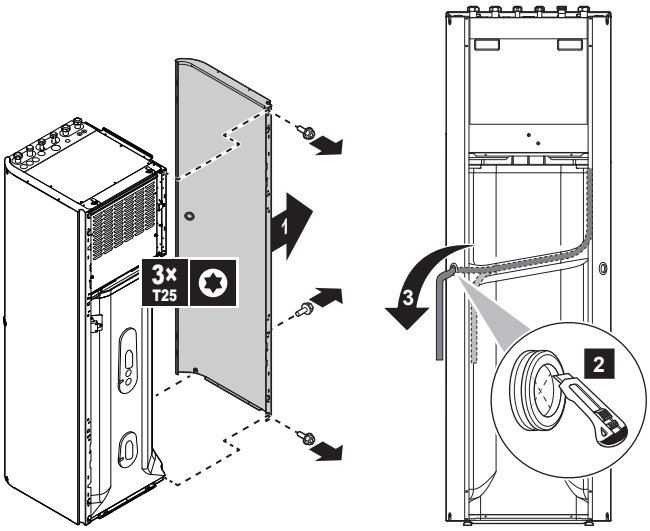

8 Piping installation

In this chapter

8.1 Preparing water piping ... 87
8.1.1 Water circuit requirements ... 87
8.1.2 Formula to calculate the expansion vessel pre-pressure ... 91
8.1.3 To check the water volume and flow rate ... 91
8.1.4 Changing the pre-pressure of the expansion vessel ... 94
8.1.5 To check the water volume: Examples ... 94
8.2 Connecting water piping ... 94
8.2.1 About connecting the water piping ... 94
8.2.2 Precautions when connecting the water piping ... 94
8.2.3 To connect the water piping ... 94
8.2.4 To connect the water piping for domestic hot water ... 98
8.2.5 To connect the recirculation piping ... 101
8.2.6 To fill the water circuit ... 101
8.2.7 To protect the water circuit against freezing ... 102
8.2.8 To fill the domestic hot water tank ... 104
8.2.9 To insulate the water piping ... 104

8.1 Preparing water piping

8.1.1 Water circuit requirements

INFORMATION

Also read the precautions and requirements in the "2 General safety precautions" [▶ 10].

NOTICE

In case of plastic pipes, make sure they are fully oxygen diffusion tight according to DIN 4726. The diffusion of oxygen into the piping can lead to excessive corrosion.

- **Connecting piping – Legislation.** Make all piping connections in accordance with the applicable legislation and the instructions in the "Installation" chapter, respecting the water inlet and outlet.
- **Connecting piping – Force.** Do NOT use excessive force when connecting the piping. Deformation of the piping can cause malfunctioning of the unit.
- **Connecting piping – Tools.** Only use appropriate tooling to handle brass, which is a soft material. If NOT, pipes will get damaged.
- **Connecting piping – Air, moisture, dust.** If air, moisture or dust gets into the circuit, problems may occur. To prevent this:
  - ONLY use clean pipes.
  - Hold the pipe end downwards when removing burrs.
  - Cover the pipe end when inserting it through a wall, to prevent dust and/or particles from entering the pipe.
  - Use a decent thread sealant to seal connections.
  - When using non-brass metallic piping, make sure to insulate both materials from each other to prevent galvanic corrosion.
  - Because brass is a soft material, use appropriate tooling for connecting the water circuit. Inappropriate tooling will cause damage to the pipes.
- **Insulation.** Insulate up to the base of the heat exchanger.
- **Freeze.** Protect against freezing.

- **Closed circuit.** Use the indoor unit ONLY in a closed water system. Using the system in an open water system will lead to excessive corrosion.
- **Piping length.** It is recommended to avoid long runs of piping between the domestic hot water tank and the hot water end point (shower, bath,...) and to avoid dead ends.
- **Piping diameter.** Select the water piping diameter in relation to the required water flow and the available external static pressure of the pump. See "16 Technical data" [▶ 226] for the external static pressure curves of the indoor unit.
- **Water flow.** You can find the minimum required water flow for indoor unit operation in the following table. In all cases, this flow needs to be guaranteed. When the flow is lower, the indoor unit will stop operation and display error 7H.

If operation is...	Then the minimum flow rate is...
Cooling / heating start-up / defrost / backup heater operation	Required: ▪ For EPVX07: 20 l/min ▪ For EPVX10: 22 l/min ▪ For EPVX14: 24 l/min
Domestic hot water production	Recommended: ▪ For EPVX07: 20 l/min ▪ For EPVX10: 25 l/min ▪ For EPVX14: 25 l/min

- **Field supply components – Water.** Only use materials that are compatible with water used in the system and with the materials used in the indoor unit.
- **Field supply components – Water pressure and temperature.** Check that all components in the field piping can withstand the water pressure and water temperature.
- **Water pressure – Domestic hot water.** The maximum water pressure is 10 bar (=1.0 MPa), and must be in accordance with the applicable legislation. Provide adequate safeguards in the water circuit to ensure that the maximum pressure is NOT exceeded (see "8.2.3 To connect the water piping" [▶ 94]). The minimum water pressure to operate is 1 bar (=0.1 MPa).
- **Water pressure – Space heating/cooling circuit.** The maximum water pressure is 3 bar (=0.3 MPa). Provide adequate safeguards in the water circuit to ensure that the maximum pressure is NOT exceeded. The minimum water pressure to operate is 1 bar (=0.1 MPa).
- **Water temperature.** All installed piping and piping accessories (valve, connections,...) MUST withstand the following temperatures:

INFORMATION

The following figure is an example and may NOT completely match your system layout.

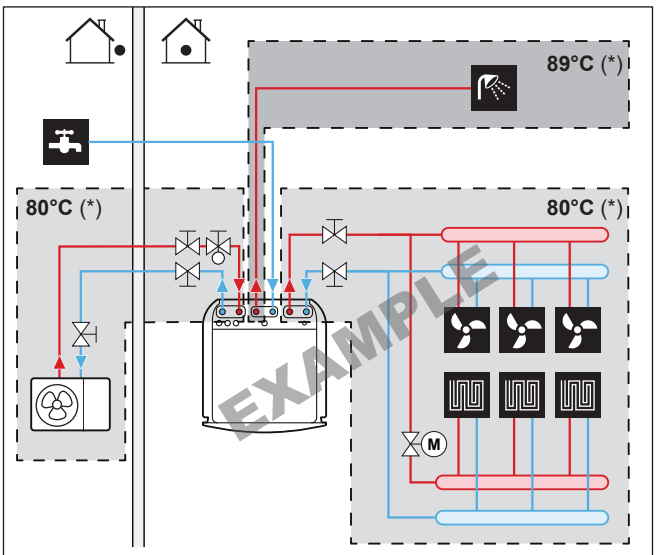

(*) Maximum temperature for piping and accessories

INFORMATION

The maximum leaving water temperature is decided based on setting [3.12] `Overheating setpoint`. This limit defines the maximum leaving water **in the system**. Depending on the value of this setting, the maximum LWT setpoint will also be reduced by 5°C to allow stable control towards the setpoint.

The maximum leaving water temperature **in the main zone** is decided based on setting [1.19] `Overheating water circuit`, only in case [3.13.5] `Bizone kit installed` is enabled. This limit defines the maximum leaving water **in the main zone**. Depending on the value of this setting, the maximum LWT setpoint will also be reduced by 5°C to allow stable control towards the setpoint.

- **Drainage – Low points.** Provide drain taps at all low points of the system in order to allow complete drainage of the water circuit.
- **Drainage – DHW pressure relief valves.** Provide a proper drain for the pressure relief valves (of both the domestic hot water tank and the domestic hot water tank kit) to avoid water spillage around the unit. For the discharge piping connected to these valves, respect the requirements from the table below. For more information, see "8.2.4 To connect the water piping for domestic hot water" [▸ 98].

Item	Requirement
Pressure relief valve diameter	15 mm
Discharge pipe diameter (to pressure relief valve)	15 mm
Discharge piping diameter (from tundish)	22 mm
Discharge piping material (from tundish)	Metal
Vertical length below tundish, before first elbow or bend	≥300 mm
Continuous fall after first elbow or bend	≥1:200
Maximum resistance[(a)]	≤9 m
Resistance created by each elbow or bend	0.8 m

[(a)] The maximum allowed resistance (i.e. equivalent length) is expressed as a length of straight pipe (i.e. no elbows or bends).

NOTICE

All piping MUST be installed according to section G3 of the Building Regulations.

- **Drainage – Pressure relief valve.** Connect the drain hose properly to the drain to avoid water dripping out of the unit. See "7.4.3 To connect the drain hose to the drain" [▸ 85].
- **Air vents.** Provide air vents at all high points of the system, which must also be easily accessible for servicing.

  When automatic air purge valves are installed in the field piping, aware the instructions on how to handle these air purge valves. For more information, see "8.2.6 To fill the water circuit" [▸ 101].

  - Between the outdoor unit and the indoor unit (on the entering water pipe of the indoor unit)
  - after the indoor unit (on the emitter side)

  Two automatic air purges are provided in the indoor unit. Check that these air purges are NOT tightened too much, so that automatic release of air in the water circuit is possible.
- **Zn-coated parts.** NEVER use zinc coated parts in the water circuit. Because the internal water circuit of the unit uses copper piping, excessive corrosion may occur.
- **Non-brass metallic piping.** When using non-brass metallic piping, insulate the brass and non-brass properly so that they do NOT make contact with each other. This is to prevent galvanic corrosion.
- **Valve – Changeover time.** When using a 2-way valve or a 3-way valve in the water circuit, the maximum changeover time of the valve must be 60 seconds.
- **Domestic hot water tank – Capacity.** To avoid stagnation of water, it is important that the storage capacity of the domestic hot water tank meets the daily consumption of domestic hot water.
- **Domestic hot water tank – After installation.** Immediately after installation, the domestic hot water tank must be flushed with fresh water. This procedure must be repeated at least once a day the first 5 consecutive days after installation.
- **Domestic hot water tank – Standstills.** In cases where during longer periods of time there is no consumption of hot water, the equipment MUST be flushed with fresh water before usage.
- **Domestic hot water tank – Disinfection.** For the disinfection function of the domestic hot water tank, see the "Settings" chapter in the configuration reference guide ([4.10] `Disinfection` / [4.18] `Disinfection enable`).
- **Domestic hot water tank kit – Clean pipes.** Before installing the domestic hot water tank kit, all piping and fittings must be flushed free of flux and debris. Failure to do this may cause irreparable damage to the tank kit control valves. Flush the system by opening the hot water tap.
- **Domestic hot water tank kit – Pressure balancing.** To prevent large pressure differences at the taps and damage to the shower valve due to high-pressure cold water (5 bar), provide a dedicated 3.5-bar feed to both cold water and hot water taps. To do this, also connect the cold water supply for the cold water taps to the pressure reducing valve of the domestic hot water tank kit.

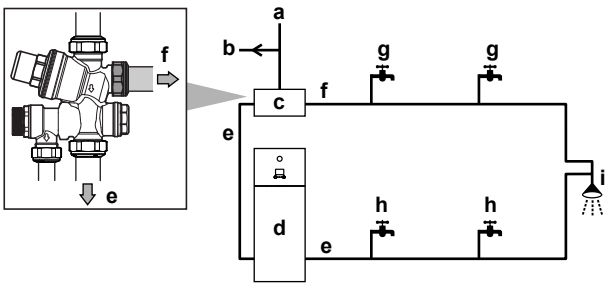

a Cold water supply into house at 5 bar
b To 5 bar taps
c Pressure reducing valve (set to 3.5 bar) (part of the domestic hot water tank kit)
d Indoor unit
e Dedicated 3.5 bar feed – to/from DHW tank
f Dedicated 3.5 bar feed – cold water
g Cold water taps
h Hot water taps
i Shower

- **Domestic hot water tank – Pressure relief valve.** A pressure relief valve (part of the inlet control group) with an opening pressure of 8 bar prevents excessive water pressure in the water circuit.
- **Domestic hot water tank – Pressure and temperature relief valve.** The pressure and temperature relief valve prevents excessive water pressure (≥10 bar) and excessive water temperature (>95°C) in the domestic hot water tank.
- **Thermostatic mixing valves.** In accordance with the applicable legislation, it may be necessary to install thermostatic mixing valves.
- **Hygienic measures.** The installation must be in compliance with the applicable legislation and may require additional hygienic installation measures.
- **Recirculation pump.** In accordance with the applicable legislation, it may be required to connect a recirculation pump in between the hot water end point and the recirculation connection of the domestic hot water tank (i.e. between **c** and **a**).

  Requirement for France (Arrêté du 30/11/05): If the water volume between the tank hot water outlet and the tap point (i.e. between **b** and **c**) exceeds 3 litres, the water temperature must be maintained at or above 50°C throughout the entire distribution system.

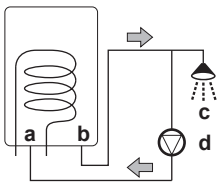

a Recirculation connection
b Hot water connection
c Shower
d Recirculation pump

8.1.2 Formula to calculate the expansion vessel pre-pressure

The pre-pressure (Pg) of the vessel depends on the installation height difference (H):

Pg=0.3+(H/10) (bar)

8.1.3 To check the water volume and flow rate

The indoor unit has an expansion vessel of 10 litre with a factory-set pre-pressure of 1 bar.

To make sure that the unit operates properly:

- You MUST check the minimum and maximum water volume.
- You might need to adjust the pre-pressure of the expansion vessel.

Minimum water volume

The installation needs to be made in such a way that a minimum water volume (see table below) is always available in the space heating/cooling loop of the unit, even when the available volume towards the unit is reduced because of closure of valves (heat emitters, thermostatic valves, etc.) in the space heating/cooling circuit.

The internal water volume of the outdoor unit is NOT considered for this minimum water volume.

If...	Then the minimum water volume is...
Cooling operation	For EPVX07: 13 l For EPVX10: 25 l For EPVX14: 30 l
Heating/defrost operation	For EPVX07 : 0 l For EPVX10: 0 l For EPVX14: 20 l

INFORMATION

In critical processes, or in rooms with a high heat load, extra water might be required.

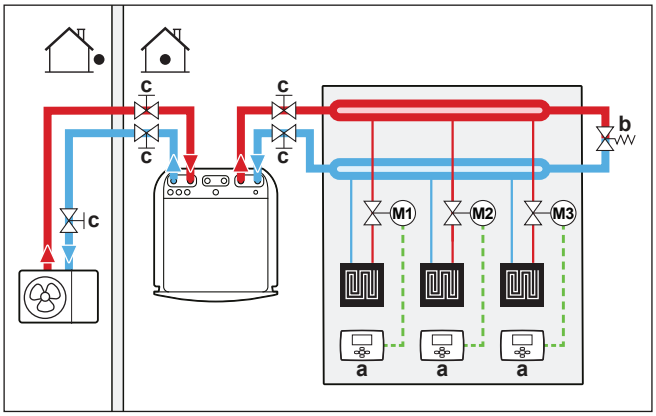

a Individual room thermostat (optional)
b Differential pressure bypass valve (delivered as accessory)
c Shut-off valve

Maximum water volume

Use the following graph to determine the maximum water volume for the calculated pre-pressure.

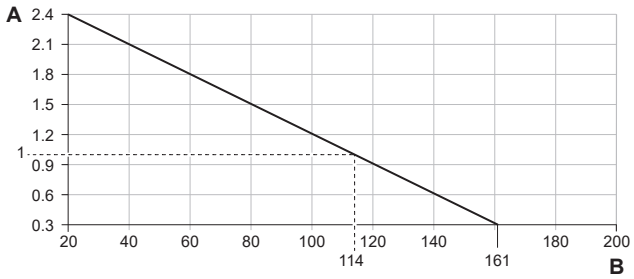

A Pre-pressure (bar)
B Maximum water volume (l)

Example: Maximum water volume and expansion vessel pre-pressure

Installation height difference[a]	Water volume	
	≤161 l	>161 l
≤7 m	No pre-pressure adjustment is required.	Do the following: ▪ Decrease the pre-pressure according to the required installation height difference. The pre-pressure should decrease by 0.1 bar for each metre below 7 m. ▪ Check if the water volume does NOT exceed the maximum allowed water volume.
>7 m	Do the following: ▪ Increase the pre-pressure according to the required installation height difference. The pre-pressure should increase by 0.1 bar for each metre above 7 m. ▪ Check if the water volume does NOT exceed the maximum allowed water volume.	The expansion vessel of the indoor unit is too small for the installation. In this case, it is recommended to install an extra vessel outside the unit.

[a] This is the height difference (m) between the highest point of the water circuit and the indoor unit. If the indoor unit is at the highest point of the installation, the installation height is 0 m.

Minimum flow rate

Check that the minimum flow rate in the installation is guaranteed in all conditions. For this purpose, use the differential pressure bypass valve delivered with the unit, and respect the minimum water volume.

If operation is...	Then the minimum flow rate is...
Cooling / heating start-up / defrost / backup heater operation	Required: ▪ For EPVX07: 20 l/min ▪ For EPVX10: 22 l/min ▪ For EPVX14: 24 l/min
Domestic hot water production	Recommended: ▪ For EPVX07: 20 l/min ▪ For EPVX10: 25 l/min ▪ For EPVX14: 25 l/min

NOTICE

When circulation in each or certain space heating loops is controlled by remotely controlled valves, it is important that the minimum flow rate is guaranteed, even if all valves are closed. In case the minimum flow rate cannot be reached, a flow error 7H will be generated.

See the recommended procedure as described in "11.4 Checklist during commissioning" [▶ 160].

8.1.4 Changing the pre-pressure of the expansion vessel

Changing the pre-pressure of the expansion vessel should be done by releasing or increasing nitrogen pressure through the Schrader valve of the expansion vessel.

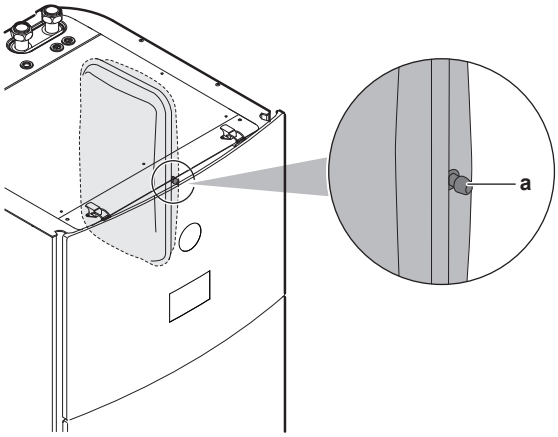

a Schrader valve

8.1.5 To check the water volume: Examples

8.2 Connecting water piping

8.2.1 About connecting the water piping

Before connecting the water piping

Typical workflow

Connecting the water piping typically consists of the following stages:

1. Connecting the water piping to the outdoor unit.
2. Connecting the water piping to the indoor unit.
3. Connecting the recirculation piping.
4. Filling the water circuit.
5. Filling the domestic hot water tank.
6. Insulating the water piping.

8.2.2 Precautions when connecting the water piping

INFORMATION

Also read the precautions and requirements in the following chapters:

- "2 General safety precautions" [▸ 10]
- "8.1 Preparing water piping" [▸ 87]

8.2.3 To connect the water piping

NOTICE

Do NOT use excessive force when connecting the field piping and make sure the piping is aligned properly. Deformed pipes can cause the unit to malfunction.

Outdoor unit

NOTICE

About the shut-off valve with integrated filter and check valve (delivered as accessory):

- The installation of the valve at the water inlet is mandatory.
- Mind the flow direction of the valve.

NOTICE

Install air purge valves at all local high points.

1 Connect the O-rings and shut-off valve to the outdoor unit water inlet. Mind the flow direction.

In case of EPSK06~14A*:

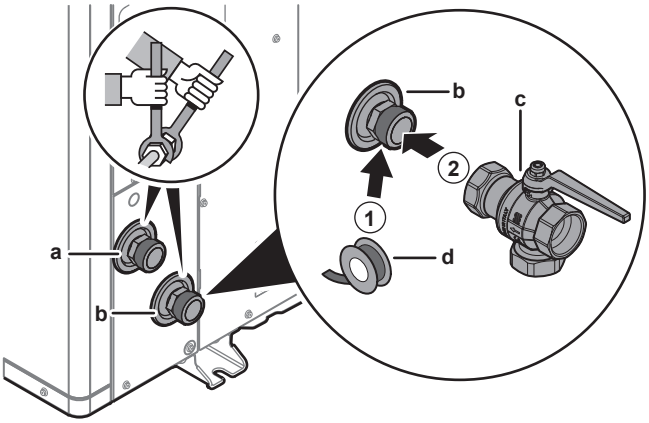

- **a** Water OUT (screw connection, male, 1 1/4")
- **b** Water IN (screw connection, male, 1 1/4")
- **c** Shut-off valve with integrated filter and check valve (delivered as accessory)(screw connections, female 1 1/4" – female 1 1/4")
- **d** Thread sealant (field supply)

In case of EPSKS04~07A*:

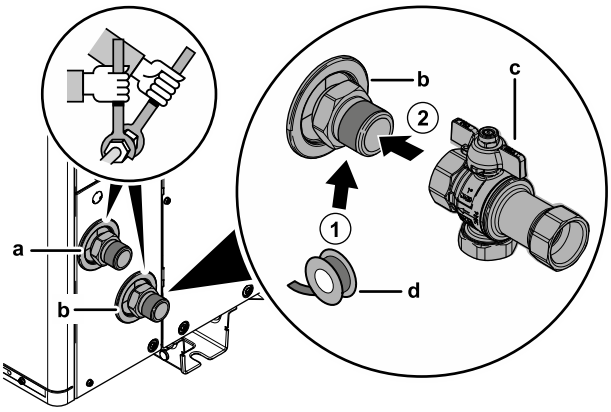

- **a** Water OUT (screw connection, male, 1")
- **b** Water IN (screw connection, male, 1")
- **c** Shut-off valve with integrated filter and check valve (delivered as accessory)(screw connections, female 1" – female 1")
- **d** Thread sealant (field supply)

2 Connect the field piping to the shut-off valve.

3 Connect the field piping to the outdoor unit water outlet.

Indoor unit

Delivered as accessory:

1 normally closed shut-off valve (+ quick clip)	To prevent refrigerant from entering the indoor unit in case of a refrigerant leak in the outdoor unit.
4 shut-off valves (+ O-rings)	To facilitate service and maintenance.
1 differential pressure bypass valve	To ensure the minimum flow rate (and prevent overpressure).

1 Install the normally closed shut-off valve (+ quick clip), and shut-off valves (+ O-rings) as follows:

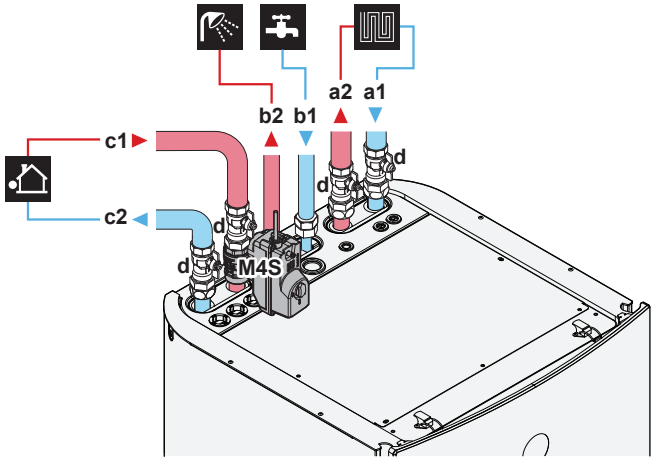

a1 Space heating/cooling – Water IN (screw connection)
- EPVX07: 1"
- EPVX10+14: 1 1/4"

a2 Space heating/cooling – Water OUT (screw connection)
- EPVX07: 1"
- EPVX10+14: 1 1/4"

b1 DHW – Cold water IN (screw connection, 3/4")

b2 DHW – Hot water OUT (screw connection, 3/4")

c1 Water IN from outdoor unit (screw connection)
- EPVX07: 1"
- EPVX10+14: 1 1/4"

c2 Water OUT to outdoor unit (screw connection)
- EPVX07: 1"
- EPVX10+14: 1 1/4"

d Shut-off valve (+ O-rings)
- EPVX07: male 1" – female 1"
- EPVX10+14: male 1" – female 1 1/4"

M4S Normally closed shut-off valve (+ quick clip)(inlet leak stop)(quick coupling – female 1")

2 Install the differential pressure bypass valve on the space heating water outlet.

3 Connect the domestic hot water IN and OUT pipes to the indoor unit. It is obligatory to use the accessory G3 kit EKUHWG3D to comply with UK legislation. See "8.2.4 To connect the water piping for domestic hot water" [▶ 98].

NOTICE

- It is recommended to install shut-off valves to domestic cold water in and domestic hot water out connections. These shut-off valves are field supplied.
- **However, make sure there is no valve between the pressure relief valve (field supply) and the DHW tank.**
- Select valves complying to EN 1487, EN 1488, EN 1489, EN 1490 and EN 1491.

NOTICE

A pressure relief valve with an opening pressure of maximum 10 bar (=1 MPa) must be installed on the domestic cold water inlet connection in accordance with the applicable legislation.

NOTICE

- A drain device and pressure relief device must be installed on the cold water inlet connection of the domestic hot water cylinder.
- To avoid back siphonage, it is recommended to install a non-return valve on the water inlet of the domestic hot water tank in accordance with the applicable legislation. Make sure it is NOT between the pressure relief valve and the DHW tank.
- It is recommended to install a pressure reducing valve on the cold water inlet in accordance with the applicable legislation.
- It is recommended to install an expansion vessel on the cold water inlet in accordance with the applicable legislation.
- It is recommended to install the pressure relief valve on a higher position than the top of the domestic hot water tank. Heating of the domestic hot water tank causes water to expand and without pressure relief valve the water pressure inside the tank can rise above the tank design pressure. Also the field installation (piping, tapping points, etc.) connected to the tank is subjected to this high pressure. To prevent this, a pressure relief valve needs to be installed. The overpressure prevention depends on the correct operation of the field installed pressure relief valve. If this is NOT working correctly, overpressure will deform the tank and water leakage may occur. To confirm good operation, regular maintenance is required.

NOTICE

Differential pressure bypass valve (delivered as accessory). We recommend to install the differential pressure bypass valve in the space heating water circuit.

- Mind the minimum water volume when choosing the installation location of the differential pressure bypass valve (at the indoor unit, or at the collector). See "8.1.3 To check the water volume and flow rate" [▶ 91].
- Mind the minimum flow rate when adjusting the differential pressure bypass valve setting. See "8.1.3 To check the water volume and flow rate" [▶ 91] and "11.4.4 To check the minimum flow rate" [▶ 168].

NOTICE

Install air purge valves at all local high points.

8.2.4 To connect the water piping for domestic hot water

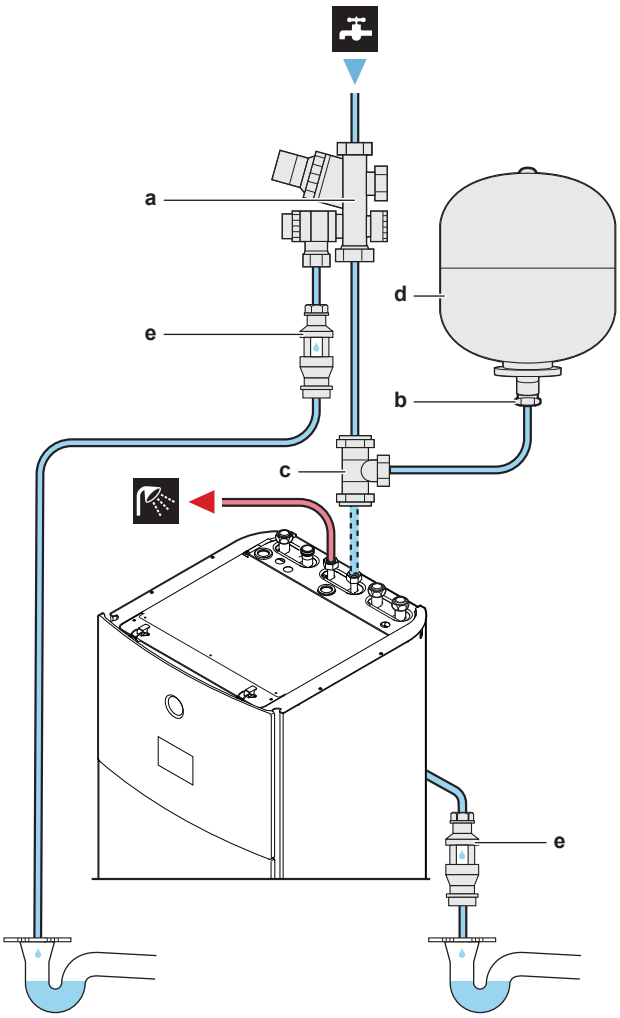

- **a** Pressure reducing valve/pressure relief valve combination. Water inlet and water outlet 22 mm connection, discharge piping connection 15 mm
- **b** Adaptor 22 mm×3/4" Female BSP
- **c** T-piece 22 mm×22 mm×22 mm
- **d** Expansion vessel of 18 l – 3/4" Male BSP
- **e** Tundish 15 mm inlet, 22 mm outlet

1 Pre-assemble the adaptor and expansion vessel so that the expansion vessel is ready for installation.

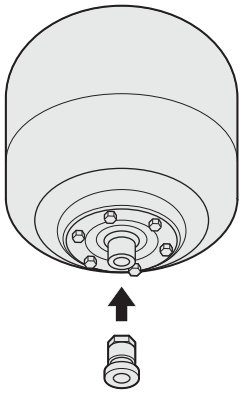

2 Mount the expansion vessel to the wall.

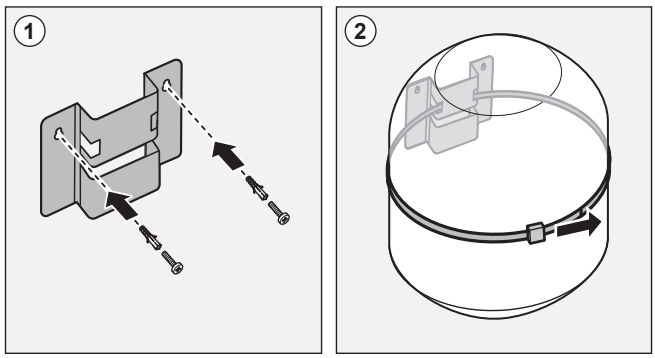

3 Fit the T-piece (part of the kit) to the domestic hot water cold water IN pipe of the unit.

4 Connect the pressure reducing valve/pressure relief valve combination (part of the kit) to the T-piece with a length of copper tube Ø22 mm (field supply).

5 Connect the expansion vessel to the T-piece with a length of copper tube Ø22 mm (field supply).

6 Connect the pressure reducing valve/pressure relief valve combination to the water mains inlet.

7 Install the tundish (part of the kit) in a vertical position within a maximum of 600 mm away from the pressure reducing valve/pressure relief valve combination.

WARNING

Install the tundish away from any electrical device. **Possible consequence:** Electrical shock or fire.

NOTICE

To ensure a free water flow through the discharge pipe, manually operate the pressure relief valve by turning its knob left.

8 Using the accessory brass compression coupler (see "4.3.1 To remove the accessories from the domestic hot water tank kit" [▸ 29]), connect the accessory pipe (see "4.2.2 To remove the accessories from the indoor unit" [▸ 28]) to the pipe connection located at the back of the unit. This pipe starts at the pressure relief valve of the domestic hot water tank.

NOTICE: Risk of condensation

The discharge pipe coming out of the indoor unit MUST be completely insulated:

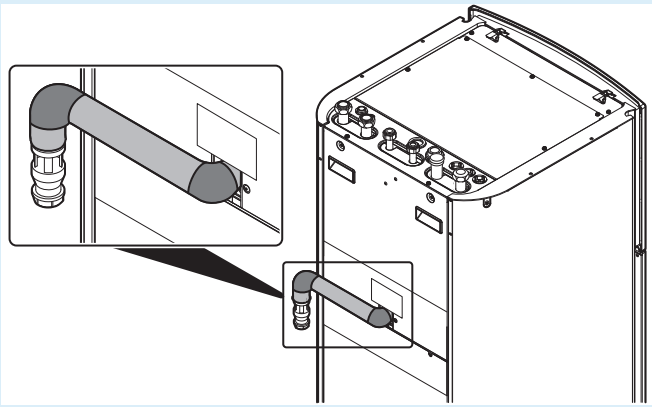

9 Connect the two tundishes (one from the pressure relief valve of the domestic hot water tank, and one from the pressure relief valve of the domestic hot

water tank kit) to an appropriate drain according to the applicable legislation. The following example shows discharge below fixed grating (Building Regulation G3 section 3.61 gives alternative points of discharge):

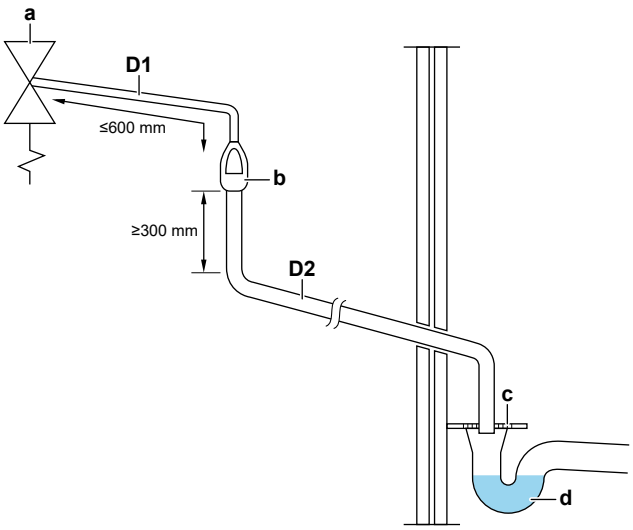

- **a** Safety device (pressure and temperature relief valve of domestic hot water tank; pressure relief valve of domestic hot water tank kit)
- **b** Tundish
- **c** Fixed grating
- **d** Trapped gully
- **D1** Metal discharge pipe from safety device to tundish
- **D2** Discharge pipe from tundish, with continuous fall. See Building Regulation G3 section 3.56, Table 03 and worked example.

10 After completing the installation, the installer MUST fill out the warning label on the tank with indelible ink, in order to comply with the building regulations. The warning label can be found in the vicinity of the nameplate.

WARNING TO USER

a. Do not remove or adjust any component of this unvented water heater; contact the installer.

b. If this unvented water heater develops a fault, such as a flow of hot water from the discharge pipe, switch the heater off and contact the installer.

WARNING TO INSTALLER

a. This installation is subject to the Building Regulations.

b. Use only appropriate components for installation or maintenance.

Installed by:

Name .....

Address .....

Tel. No. .....

Completion date .....

WARNING

The discharge pipes from the pressure relief valves MUST terminate in a safe and visible position without forming any risk to persons in the vicinity.

WARNING

- Discharge piping, tundish, drain valves, etc. MUST be positioned away from any electrical components.
- The discharge pipe away from the tundish MUST terminate in a safe, visible position without forming any risk to persons in the vicinity.

WARNING

- Do NOT install any valves between the domestic hot water tank and relief valves/ expansion vessel.
- Do NOT install shut-off valves between the expansion relief valve and the domestic hot water tank.

8.2.5 To connect the recirculation piping

Prerequisite: Only required if you need recirculation in your system.

1. Remove the top panel from the unit, see "7.2.5 To open the indoor unit" [▸ 78].
2. Cut out the rubber grommet on top of the unit, and remove the stop. The recirculation connector is placed below the hole.
3. Route the recirculation piping through the grommet and connect it to the recirculation connector.

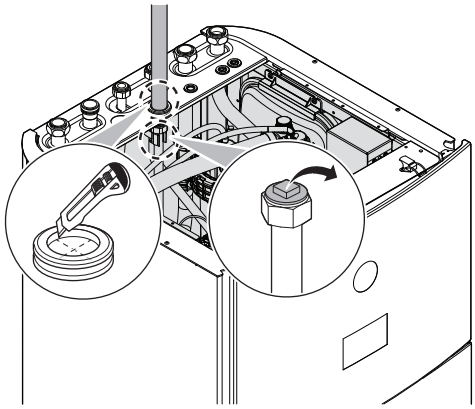

4. Reattach the top panel.

8.2.6 To fill the water circuit

To fill the water circuit, use a field supply filling kit. Make sure you comply with the applicable legislation.

Attach the "No glycol" tag (delivered as accessory) to the field piping near the filling point.

WARNING

Adding anti-freeze solutions (e.g. glycol) to the water is NOT allowed.

NOTICE

If automatic air purge valves are installed in the field piping:

- Between the outdoor unit and the indoor unit (on the entering water pipe of the indoor unit), they must be closed after commissioning.
- After the indoor unit (on the emitter side), they may remain open after commissioning.

NOTICE

To prevent the pump from running in dry conditions, only power ON the unit when there is water in the unit.

8.2.7 To protect the water circuit against freezing

About freeze protection

Frost can damage the system. To prevent the hydraulic components from freezing, the unit is equipped with the following:

- The software is equipped with special frost protection functions such as water pipe freeze prevention that include the activation of a pump in case of low temperatures. However, in case of a power failure, these functions cannot guarantee protection.
- The outdoor unit is equipped with two factory mounted freeze protection valves. Freeze protection valves drain the water from the outdoor unit before it can freeze and damage the unit. This is to prevent R290 leaks in the outdoor unit. **Note:** The factory mounted freeze protection valves are designed to protect the outdoor unit, not the field piping.

To ensure protection of field piping, install **additional freeze protection valves** at all lowest points of the field piping. Insulate these field installed freeze protection valves in a similar way as the water piping, but do NOT insulate the inlet and outlet (release) of these valves.

Optionally, you can install **normally closed valves** (located indoors near the piping entry/exit points). These valves can prevent that all water from the indoor piping is drained when the freeze protection valves open. **Note:** The normally closed shut-off valve that is delivered as accessory with the indoor unit, which is mandatory to install on the indoor unit for safety reasons (inlet leak stop), does NOT prevent drainage of the indoor piping when the freeze protection valves open. For this, you need additional normally closed valves (optional).

NOTICE

When freeze protection valves are installed, set the minimum cooling setpoint (default=7°C) at least 2°C higher than the maximum opening temperature of the freeze protection valves (the opening temperature of the factory-mounted freeze protection valves is 3°C ±1).

If you set the minimum cooling setpoint lower than the safe value (i.e. maximum opening temperature of freeze protection valves + 2°C), you risk that the freeze protection valves open when cooling to the minimum setpoint.

INFORMATION

The minimum leaving water temperature is decided based on setting [3.11] `Undercooling setpoint`. This limit defines the minimum leaving water **in the system**. Depending on the value of this setting, the minimum LWT setpoint will also be increased by 4°C to allow stable control towards the setpoint.

The minimum leaving water temperature **in the main zone** is decided based on setting [1.20] `Undercooling water circuit`, only in case [3.13.5] `Bizone kit installed` is enabled. This limit defines the minimum leaving water **in the main zone**. Depending on the value of this setting, the minimum LWT setpoint will also be increased by 4°C to allow stable control towards the setpoint.

WARNING

Adding anti-freeze solutions (e.g. glycol) to the water is NOT allowed.

Freeze protection by freeze protection valves

About freeze protection valves

It is the responsibility of the installer to protect the field piping against freezing. Use freeze protection valves at all lowest points of the field piping to drain the water from the system before it can freeze.

To install freeze protection valves

To protect the field piping against freezing, install the following parts:

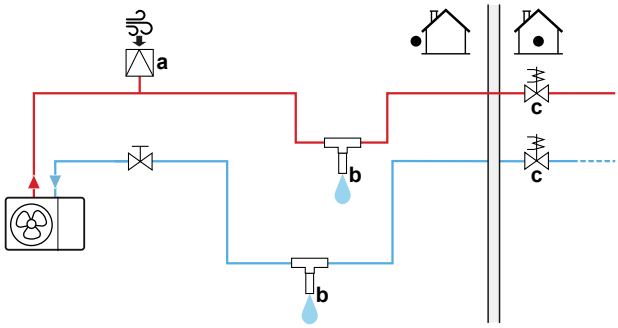

a Automatic air intake
b Freeze protection valve (optional – field supply)
c Normally closed valves (recommended – field supply)

Part	Description
a	An automatic air intake (for air supply) should be installed at the highest point. For example, an automatic air purge.
b	Protection for the field piping. ▪ Install the freeze protection valves: - At all lowest points of the field piping. - In the coldest part of the field piping, away from heat sources. - Vertically to allow water to flow out properly. - >15 cm above the ground to prevent ice from blocking the water exit. Make sure there are no obstructions. - >10 cm away from other freeze protection valves. ▪ Prevent rain, snow and direct sunlight on the freeze protection valves. ▪ Insulate the freeze protection valves in a similar way as the water piping, but do NOT insulate the inlet and outlet (release) of these valves. ▪ Do NOT make traps in the field piping. 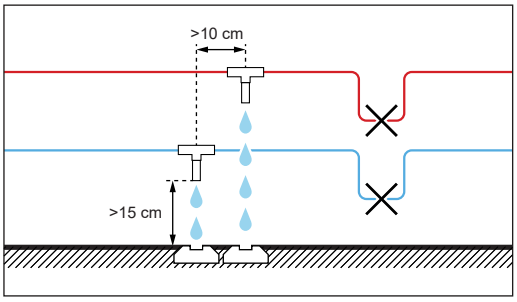

Part	Description
c	Isolation of water inside the house when there is a power interruption. Normally closed valves (located indoors near the piping entry/exit points) can prevent that all water from indoor piping is drained when the freeze protection valves open. ▪ **When there is a power interruption:** The normally closed valves close and isolate the water inside the house. If the freeze protection valves open, only the water outside the house is drained. ▪ **In other circumstances** (example: when there is a pump failure): The normally closed valves remain open. If the freeze protection valves open, the water from inside the house is also drained.

8.2.8 To fill the domestic hot water tank

1. Open every hot water tap in turn to purge air from the system pipe work.
2. Open the cold water supply valve.
3. Close all water taps after all air is purged.
4. Check for water leaks.

8.2.9 To insulate the water piping

The piping in the complete water circuit MUST be insulated to prevent condensation during cooling operation and reduction of the heating and cooling capacity.

Outdoor water piping insulation

NOTICE

Outside piping. Make sure the outside piping is insulated as instructed to protect against hazards.

For piping in free air, it is recommended to use the insulation thickness as shown in below table as a minimum (with λ=0.039 W/(mK)).

Piping length (m)	Minimum insulation thickness (mm)
<30	32
30~40	40
40~50	50

For other cases the minimum insulation thickness can be determined using the Hydronic Piping Calculation tool.

The Hydronic Piping Calculation tool also calculates the maximum hydronic piping length from the indoor unit to the outdoor unit based on the emitter pressure drop or the other way around.

The Hydronic Piping Calculation tool is part of the Heating Solutions Navigator which can be reached via https://professional.standbyme.daikin.eu.

Please contact your dealer if you have no access to Heating Solutions Navigator.

This recommendation ensures good operation of the unit, however, local regulations may differ and shall be followed.

9 Electrical installation

In this chapter

9.1 About connecting the electrical wiring ... 105
9.1.1 Precautions when connecting the electrical wiring ... 105
9.1.2 Guidelines when connecting the electrical wiring ... 106
9.1.3 About electrical compliance ... 108
9.1.4 About preferential kWh rate power supply ... 108
9.1.5 Overview of electrical connections except external actuators ... 109
9.1.6 `Field IO` connections ... 109
9.2 Connections to the outdoor unit ... 113
9.2.1 Specifications of standard wiring components ... 113
9.2.2 To connect the electrical wiring to the outdoor unit ... 114
9.2.3 To fix the "Do NOT turn OFF the circuit breaker" stickers ... 116
9.2.4 To reposition the air thermistor on the outdoor unit ... 116
9.3 Connections to the indoor unit ... 117
9.3.1 To connect the electrical wiring to the indoor unit ... 120
9.3.2 To connect the main power supply ... 123
9.3.3 To connect the backup heater power supply ... 125
9.3.4 To connect the normally closed shut-off valve (inlet leak stop) ... 128
9.3.5 To connect the shut-off valve ... 129
9.3.6 To connect the pumps (DHW pump and/or external pumps) ... 130
9.3.7 To connect the domestic hot water ON signal ... 131
9.3.8 To connect the alarm output ... 131
9.3.9 To connect the space cooling/heating ON/OFF output ... 132
9.3.10 To connect the changeover to external heat source ... 132
9.3.11 To connect the bivalent bypass valve ... 133
9.3.12 To connect the electricity meters ... 133
9.3.13 To connect the safety thermostat ... 134
9.3.14 Smart Grid ... 135
9.3.15 To connect the WLAN cartridge (delivered as accessory) ... 139
9.3.16 To connect the Ethernet cable (Modbus / LAN) ... 139

9.1 About connecting the electrical wiring

Before connecting the electrical wiring

Make sure the water piping is connected.

Typical workflow

Connecting the electrical wiring typically consists of the following stages:

- "9.2 Connections to the outdoor unit" [▶ 113]
- "9.3 Connections to the indoor unit" [▶ 117]

9.1.1 Precautions when connecting the electrical wiring

DANGER: RISK OF ELECTROCUTION

WARNING

- All wiring MUST be performed by an authorised electrician and MUST comply with the national wiring regulation.
- Make electrical connections to the fixed wiring.
- All components procured on-site and all electrical construction MUST comply with the applicable legislation.

WARNING

ALWAYS use multicore cable for power supply cables.

INFORMATION

Also read the precautions and requirements in the "2 General safety precautions" [▶ 10].

WARNING

- If the power supply has a missing or wrong N-phase, equipment might break down.
- Establish proper earthing. Do NOT earth the unit to a utility pipe, surge absorber, or telephone earth. Incomplete or incorrect earthing may cause electrical shocks.
- Install the required fuses or circuit breakers.
- Secure the electrical wiring with cable ties so that the cables do NOT come in contact with sharp edges or piping, particularly on the high-pressure side.
- Do NOT use taped wires, extension cords, or connections from a star system. They can cause overheating, electrical shocks or fire.
- Do NOT install a phase advancing capacitor, because this unit is equipped with an inverter. A phase advancing capacitor will reduce performance and may cause accidents.

CAUTION

Do NOT push or place redundant cable length into the unit.

NOTICE

The distance between the high voltage and low voltage cables should be at least 50 mm.

INFORMATION

When installing field supply or option cables, foresee sufficient cable length. This will make it possible to open the switch box and gain access to other components during service.

WARNING

If the supply cord is damaged, it MUST be replaced by the manufacturer, its service agent or similarly qualified persons in order to avoid a hazard.

WARNING

Do NOT extend the power supply or the interconnection cable by using wire connectors, wire connection clamps, taped wires, extension cords.

These can cause overheating, electric shock or fire.

9.1.2 Guidelines when connecting the electrical wiring

NOTICE

We recommend using solid (single-core) wires. If stranded wires are used, slightly twist the strands to consolidate the end of the conductor for either direct use in the terminal clamp or insertion in a round crimp-style terminal.

To prepare stranded conductor wire for installation

Method 1: Twisting conductor

1 Strip insulation (20 mm) from the wires.

2 Slightly twist the end of the conductor to create a "solid-like" connection.

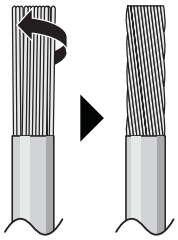

Method 2: Using round crimp-style terminal (recommended)

1 Strip insulation from wires and slightly twist the end of each wire.

2 Install a round crimp-style terminal on the end of the wire. Place the round crimp-style terminal on the wire up to the covered part and fasten the terminal with the appropriate tool.

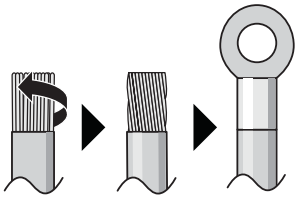

Use the following methods for installing wires:

Wire type	Installation method
Single-core wire Or Stranded conductor wire twisted to "solid-like" connection	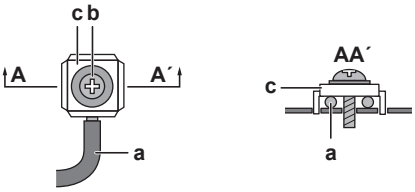 **a** Curled wire (single-core or twisted stranded conductor wire) **b** Screw **c** Flat washer
Stranded conductor wire with round crimp-style terminal	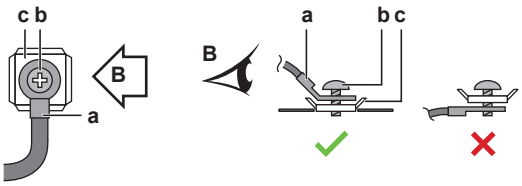 **a** Terminal **b** Screw **c** Flat washer ✓ Allowed ✕ NOT allowed

Tightening torques

Outdoor unit:

Item	Tightening torque (N•m)
X1M (M5)	2.45 ±10%
X2M (M3.5)	0.88 ±10%
M4 (earth)	1.31 ±10%

Indoor unit:

Item	Tightening torque (N•m)
M3.5 (X42M, X44M, X45M)	0.88 ±10%
M4 (X40M, X41M)	1.47 ±10%
M4 (earth)	1.47 ±10%

9.1.3 About electrical compliance

Only for EPSKS04~07A▲V3▼ and EPSK06~10A▲V3▼

Equipment complying with EN/IEC 61000-3-12 (European/International Technical Standard setting the limits for harmonic currents produced by equipment connected to public low-voltage systems with input current >16 A and ≤75 A per phase.).

Only for the backup heater of the indoor unit

See "9.3.3 To connect the backup heater power supply" [▶ 125].

9.1.4 About preferential kWh rate power supply

Electricity companies throughout the world work hard to provide reliable electric service at competitive prices and are often authorised to bill clients at benefit rates. E.g. time-of-use rates, seasonal rates, Wärmepumpentarif in Germany and Austria, ...

This equipment allows for connection to such preferential kWh rate power supply delivery systems.

Consult with the electricity company acting as provider at the site where this equipment is to be installed to know whether it is appropriate to connect the equipment in one of the preferential kWh rate power supply delivery systems available, if any.

When the equipment is connected to such preferential kWh rate power supply, the electricity company is allowed to:

- interrupt power supply to the equipment for certain periods of time;
- demand that the equipment ONLY consumes a limited amount of electricity during certain periods of time.

The indoor unit is designed to receive an input signal by which the unit switches into forced OFF mode. At that moment, the outdoor unit compressor will NOT operate.

The wiring to the unit is different depending on whether the power supply is interrupted or NOT.

9.1.5 Overview of electrical connections except external actuators

Normal power supply	Preferential kWh rate power supply	
	Power supply is NOT interrupted	**Power supply is interrupted**
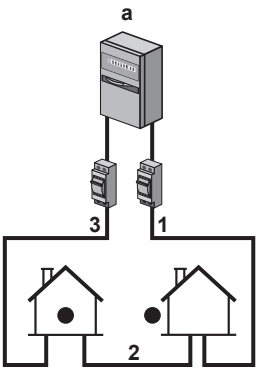	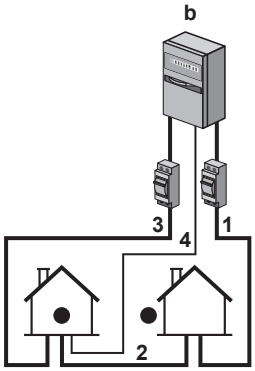 During preferential kWh rate power supply activation, power supply is NOT interrupted. The outdoor unit is turned off by the control. **Remark:** The electricity company must always allow the power consumption of the indoor unit.	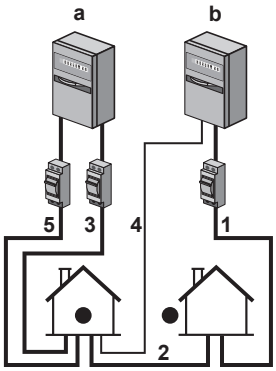 During preferential kWh rate power supply activation, power supply is interrupted immediately or after some time by the electricity company. In this case, the indoor unit must be powered by a separate normal power supply.

a Normal power supply

b Preferential kWh rate power supply

1 Power supply for outdoor unit

2 Power supply and interconnection cable to indoor unit

3 Power supply for backup heater

4 Preferential kWh rate power supply (voltage free contact)

5 Normal kWh rate power supply (to power the indoor unit PCB in the event of power supply interruption of the preferential kWh rate power supply)

9.1.6 `Field IO` connections

When connecting the electrical wiring, for certain components, you can choose which terminal pins to use. After connection, you must tell the user interface which terminal pins you used so that it matches your system layout:

- Preferably, via the breadcrumbs in [13] `Field IO`.
- Alternatively, via the field codes (see the field settings table in the installer reference guide).

1	**Choose which terminal pins to use for which component.**

1a	In case of `Field IO` inputs: Choose between the standard possibilities (❶❷❸❹❺ as shown in the respective topics of "9.3 Connections to the indoor unit" [▶ 117] and in the addendum book for optional equipment). For example: 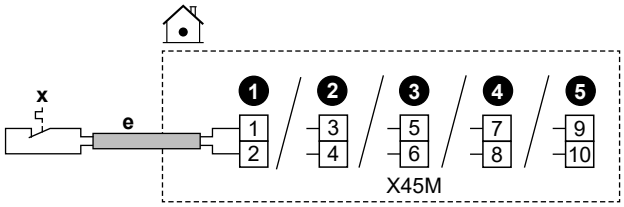
1b	In case of `Field IO` outputs: You have multiple options.
1b.1	**Option 1** (**preferred**; only possible if the running current and/or inrush current of the connected component does NOT exceed the maximum running current and/or inrush current of the terminals as listed in the respective topic)**:** Choose between the standard possibilities (❶❷❸❹ as shown in the respective topics of "9.3 Connections to the indoor unit" [▶ 117] and in the addendum book for optional equipment). For example: ▪ Maximum running current and/or inrush current of respective terminals = 0.3 A ▪ Maximum running current and/or inrush current of connected component is ≤0.3 A 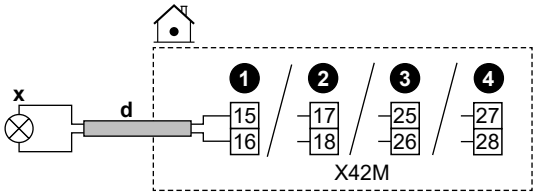
1b.2	**Option 2** (in case the running current and/or inrush current of the connected component exceeds the maximum running current and/or inrush current of the terminals as listed in the respective topic): Choose between the standard possibilities (❶❷❸❹ as shown in the respective topics of "9.3 Connections to the indoor unit" [▶ 117] and in the addendum book for optional equipment), but instead of directly connecting to the component, install a relay (field supply) with an external power supply outside of the switch box in-between. For example: ▪ Maximum running current and/or inrush current of respective terminals = 0.3 A ▪ Maximum running current and/or inrush current of connected component is >0.3 A 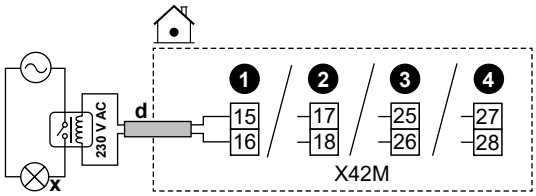

1b.3	**Option 3**: Alternatively, instead of choosing one of the standard possibilities (❶❷❸❹), you can use the terminal pins of any of the other `Field IO` outputs. However, you must also check if the running current and/or inrush current of the connected component exceeds the maximum running current and/or inrush current of the terminals as listed in the respective topic. If exceeded, you must install a relay in-between (similar to **Option 2**).
2	**Tell the user interface which terminal pins you used for which component.**
2.1	Go to [13] `Field IO`.
2.2	Select the used terminal block. **Result:** The screen with the connections on that terminal block is shown. For example: 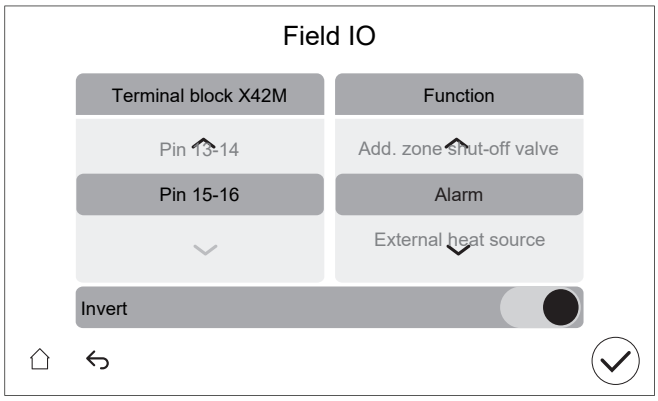
2.3	On the left, select the used terminal pins.
2.4	On the right, select the connected component: ▪ `Field IO` inputs (see table below) ▪ `Field IO` outputs (see table below)
2.5	Set whether the logic has to be inverted: **Note:** not all terminals / connected options can be inverted. If the selection is possible or not is visible in [13] `Field IO`.

If the component is...	Then set...
Normally open	`Invert` = OFF
Normally closed	`Invert` = ON

Field IO inputs

If the connected component is...	Then select `Function` = ...
Remote outdoor sensor. See addendum book for optional equipment (and "9.3 Connections to the indoor unit" [▶ 117]).	`External outdoor sensor`
Remote indoor sensor. See addendum book for optional equipment (and "9.3 Connections to the indoor unit" [▶ 117]).	`External indoor sensor`

If the connected component is...	Then select Function = ...
Smart Grid contacts. See "9.3.14 Smart Grid" [▶ 135].	HV/LV Smart Grid Contact 1
	HV/LV Smart Grid Contact 2
Preferential kWh rate power supply contact. See "9.3.2 To connect the main power supply" [▶ 123].	HP Tariff Contact
Safety thermostats for unit. See "9.3.13 To connect the safety thermostat" [▶ 134].	Safety thermostat unit
Smart Grid meter contact. See "9.3.14 Smart Grid" [▶ 135].	Smart Meter Contact

Field IO outputs

If the connected component is...	Then select Function = ...
Shut-off valves for main zone and additional zone. See "9.3.5 To connect the shut-off valve" [▶ 129]	Main zone shut-off valve
	Add. zone shut-off valve
Alarm output. See "9.3.8 To connect the alarm output" [▶ 131].	Alarm
Changeover to external heat source. See "9.3.10 To connect the changeover to external heat source" [▶ 132].	External heat source
Bivalent bypass valve. See "9.3.11 To connect the bivalent bypass valve" [▶ 133].	Bivalent bypass valve
Space cooling/heating operation ON/OFF output for the main zone or additional zone. See "9.3.9 To connect the space cooling/heating ON/OFF output" [▶ 132].	Cooling/Heating mode
Heat pump convectors. See addendum book for optional equipment (and "9.3 Connections to the indoor unit" [▶ 117]).	
DHW pump + extra external pumps. See "9.3.6 To connect the pumps (DHW pump and/or external pumps)" [▶ 130].	DHW pump
	C/H secondary pump
	C/H pump ext. main
	C/H pump ext. add.

If the connected component is...	Then select Function = ...
DHW ON signal. See "9.3.7 To connect the domestic hot water ON signal" [▶ 131].	DHW On signal

9.2 Connections to the outdoor unit

Item	Description
Power supply	See "9.2.2 To connect the electrical wiring to the outdoor unit" [▶ 114].
Interconnection cable	
(Optional) Drain tube heater	
"Do NOT turn OFF the circuit breaker" stickers	See "9.2.3 To fix the "Do NOT turn OFF the circuit breaker" stickers" [▶ 116].
Air thermistor	See "9.2.4 To reposition the air thermistor on the outdoor unit" [▶ 116].

9.2.1 Specifications of standard wiring components

Component		V3				W1	
		EPSKS04A*	EPSKS06A*	EPSKS07A*	EPSK06~10A*	EPSK08+10A*	EPSK12+14A*
Power supply:							
	Rated current	13 A	15.2 A	21.4 A	24.2 A	10.9 A	15 A
	Voltage	220-240 V				380-415 V	
	Phase	1~				3N~	
	Frequency	50 Hz					
	Wire size	MUST comply with national wiring regulation. Wire size based on the current, but not less than 2.5 mm^2					
		3-core cable				5-core cable	
Interconnection cable (indoor ↔ outdoor)							
	Voltage	220-240 V					
	Wire size	Only use harmonised wire providing double insulation and suitable for applicable voltage. 4-core cable Minimum 1.5 mm^2					
(Optional) Drain tube heater cable		3-core cable 0.75 mm^2 MUST be double insulated. Maximum power allowed for drain tube heater = 115 W (0.5 A) Drain tube heater MUST be suitable for R290 (explosion proof)					
Recommended field fuse		16 A, C curve		25 A, C curve		16 A, C curve	

Component	V3				W1	
	EPSKS04A*	EPSKS06A*	EPSKS07A*	EPSK06~10A*	EPSK08+10A*	EPSK12+14A*
Earth leakage circuit breaker / residual current device	In the power supply line, ALWAYS install a residual current device (RCD) that complies with the national wiring regulation. This MUST be an RCD of 30 mA with an instantaneous action, unless otherwise defined by the national wiring regulation.					

9.2.2 To connect the electrical wiring to the outdoor unit

1 Remove the cover and the wire retainer.

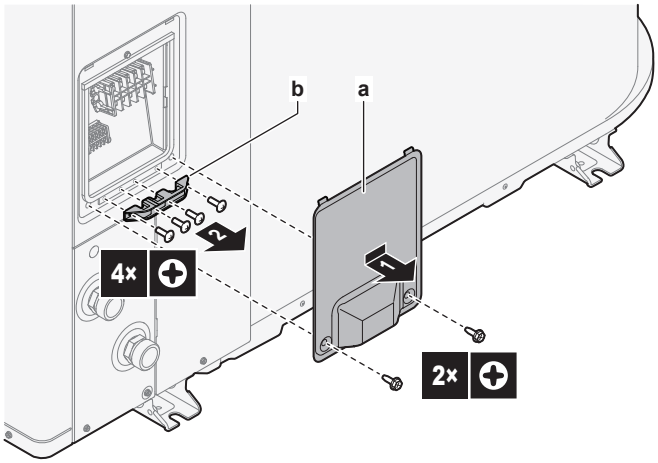

a Cover
b Wire retainer

2 Connect the wiring (see wiring overviews below):

- Power supply (1N~ or 3N~).
- Interconnection cable (indoor↔outdoor)
- (Optional) Drain tube heater. Make sure the heating element of the drain tube heater is completely inside the drain tube. Fix the cable with a cable tie to the unit's foot.

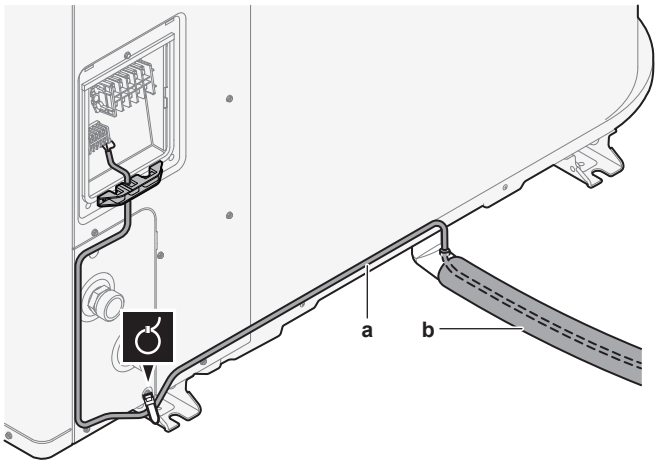

a Drain tube heater cable
b Drain tube

3 Reattach the wire retainer and the cover.

- Check that the wires do NOT disconnect by pulling them lightly.
- Firmly secure the wire retainer to avoid external stress on wire terminations.

Wiring overview: V3 models (1N~)

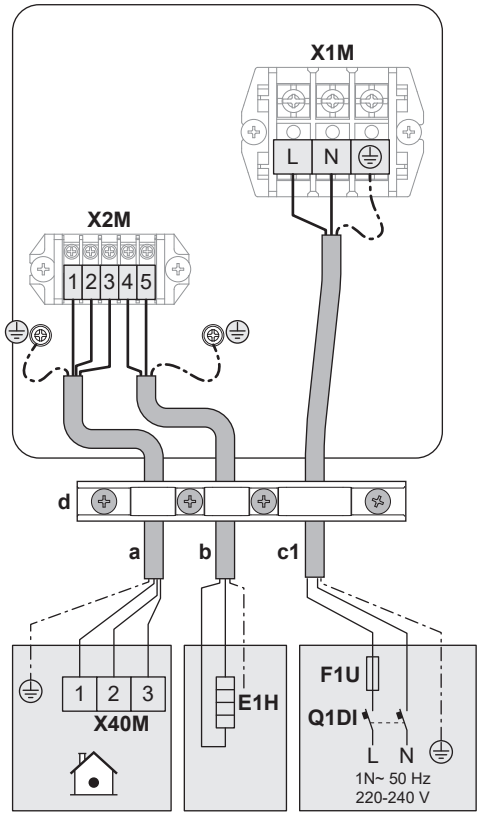

Wiring overview: W1 models (3N~)

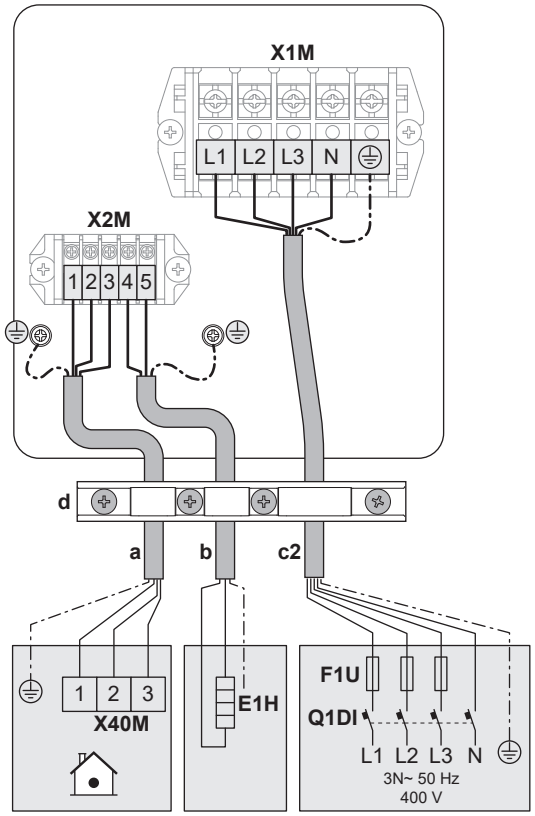

Legend of wiring overviews

(see also "9.2.1 Specifications of standard wiring components" [▶ 113])

a	Interconnection cable (indoor↔outdoor)

b	(Optional) Drain tube heater cable
c1	Power supply cable in case of V3 models (1N~)
c2	Power supply cable in case of W1 models (3N~)
d	Wire retainer
E1H	Drain tube heater
F1U	Field fuse
Q1DI	Earth leakage circuit breaker

9.2.3 To fix the "Do NOT turn OFF the circuit breaker" stickers

WARNING

After commissioning, do NOT turn OFF the circuit breakers (**c**) to the units so that the protection remains activated. In case of normal kWh rate power supply (**a**), there is one circuit breaker. In case of preferential kWh rate power supply (**b**), there are two.

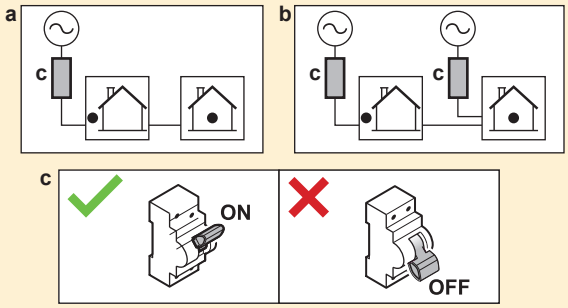

To warn the user, fix the 'Do NOT turn OFF the circuit breaker' stickers in the electrical cabinet and as close as possible to the circuit breakers of the heat pump. On the sticker, fill in the reference number of the circuit breaker to ensure maximum clarity.

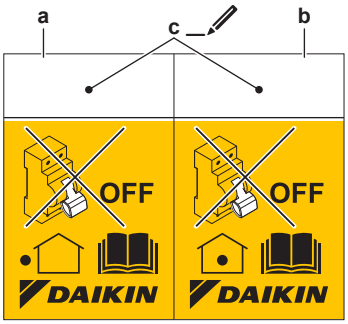

- **a** Sticker for the circuit breaker to the outdoor unit
- **b** Sticker for the circuit breaker to the indoor unit (only in case of preferential kWh rate power supply)
- **c** Reference number of the circuit breaker in the electrical cabinet

9.2.4 To reposition the air thermistor on the outdoor unit

This procedure is only necessary in areas with low ambient temperatures.

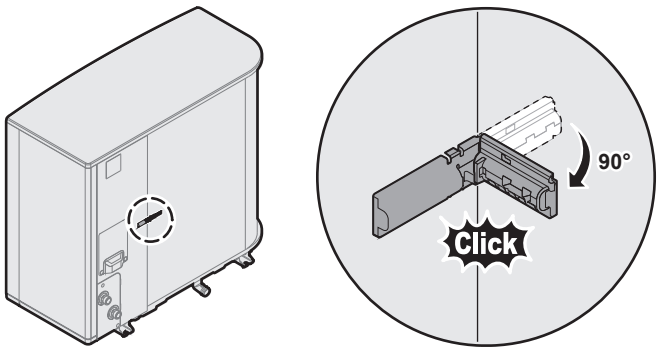

9.3 Connections to the indoor unit

Item	Description
Power supply (main)	See "9.3.2 To connect the main power supply" [▶ 123].
Power supply (backup heater)	See "9.3.3 To connect the backup heater power supply" [▶ 125].
Normally closed shut-off valve (inlet leak stop)	See "9.3.4 To connect the normally closed shut-off valve (inlet leak stop)" [▶ 128].
Shut-off valve	See "9.3.5 To connect the shut-off valve" [▶ 129].
Domestic hot water pump or external pumps	See "9.3.6 To connect the pumps (DHW pump and/or external pumps)" [▶ 130]
Domestic hot water ON signal	See "9.3.7 To connect the domestic hot water ON signal" [▶ 131]
Alarm output	See "9.3.8 To connect the alarm output" [▶ 131].
Space cooling/heating operation control	See "9.3.9 To connect the space cooling/heating ON/OFF output" [▶ 132].
Changeover to external heat source control	See "9.3.10 To connect the changeover to external heat source" [▶ 132].
Bivalent bypass valve	See "9.3.11 To connect the bivalent bypass valve" [▶ 133]
Electricity meters	See "9.3.12 To connect the electricity meters" [▶ 133].
Safety thermostat	See "9.3.13 To connect the safety thermostat" [▶ 134].
Smart Grid	See "9.3.14 Smart Grid" [▶ 135].
WLAN cartridge	See "9.3.15 To connect the WLAN cartridge (delivered as accessory)" [▶ 139].
Ethernet cable	See "9.3.16 To connect the Ethernet cable (Modbus / LAN)" [▶ 139].

Item	Description	
Room thermostat (wired or wireless)		See below table.
		Wires: 0.75 mm² Maximum running current: 100 mA
	MMI	For the main zone: ▪ [1.12] `Control` ▪ [1.13] `External room thermostat` For the additional zone: ▪ [2.12] `Control` ▪ [2.13] `External room thermostat`
Heat pump convector		There are different controllers and setups possible for the heat pump convectors. Depending on the setup, implement a relay (field supply, see addendum book for optional equipment). For more information, see: ▪ Installation manual of the heat pump convectors ▪ Installation manual of the heat pump convector options ▪ Addendum book for optional equipment
		Wires: 0.75 mm² Maximum running current: 100 mA This is a `Field IO` output connection. See "9.1.6 `Field IO` connections" [▸ 109].
	MMI	[13] `Field IO` (`Cooling/Heating mode`) For the main zone: ▪ [1.12] `Control` ▪ [1.13] `External room thermostat` For the additional zone: ▪ [2.12] `Control` ▪ [2.13] `External room thermostat`
Remote outdoor sensor		See: ▪ Installation manual of the remote outdoor sensor ▪ Addendum book for optional equipment
		Wires: 2×0.75 mm² This is a `Field IO` input connection. See "9.1.6 `Field IO` connections" [▸ 109].
	MMI	[13] `Field IO` (`External outdoor sensor`) [5.22] `External ambient sensor offset`

Item	Description
Remote indoor sensor	See: ▪ Installation manual of the remote indoor sensor ▪ Addendum book for optional equipment
	Wires: 2×0.75 mm² This is a `Field IO` input connection. See "9.1.6 `Field IO` connections" [▶ 109].
	[13] `Field IO` (`External indoor sensor`) [1.33] `External room sensor offset`
Human Comfort Interface	See: ▪ Installation and operation manual of the Human Comfort Interface ▪ Addendum book for optional equipment
	Wires: 2×(0.75~1.25 mm²) Maximum length: 500 m
	[1.12] `Control` [1.38] `Room sensor offset`
Bizone kit	See: ▪ Installation manual of the bizone kit ▪ Addendum book for optional equipment
	Use the cable delivered with the bizone kit.
	[3.13.5] `Bizone kit installed`

For the room thermostat (wired or wireless):

In case of...	See...
Wireless room thermostat	▪ Installation manual of the wireless room thermostat ▪ Addendum book for optional equipment
Wired room thermostat without multi-zoning base unit	▪ Installation manual of the wired room thermostat ▪ Addendum book for optional equipment

In case of...	See...
Wired room thermostat with multi-zoning base unit	▪ Installation manual of the wired room thermostat (digital or analogue) + multi-zoning base unit ▪ Addendum book for optional equipment ▪ In this case: - Connect the wired room thermostat (digital or analogue) to the multi-zoning base unit - Connect the multi-zoning base unit to the outdoor unit - For cooling/heating operation, implement a relay (field supply, see addendum book for optional equipment)

9.3.1 To connect the electrical wiring to the indoor unit

Opening the unit

See "7.2.5 To open the indoor unit" [▶ 78].

Cable routing

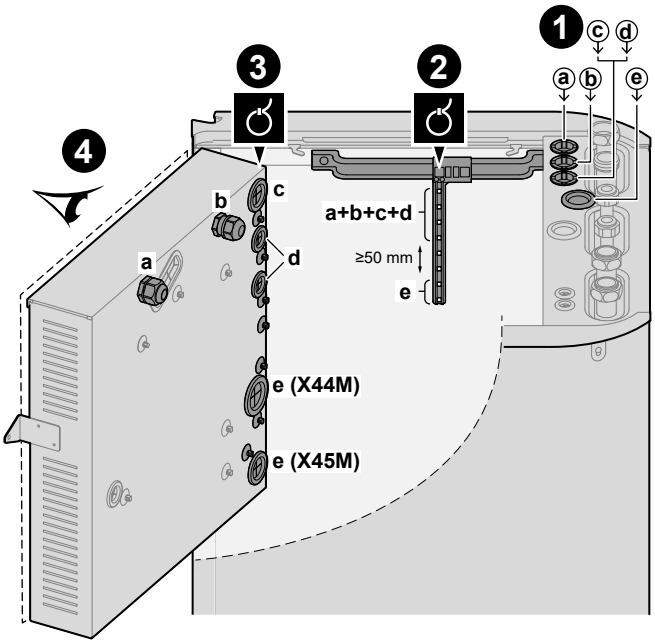

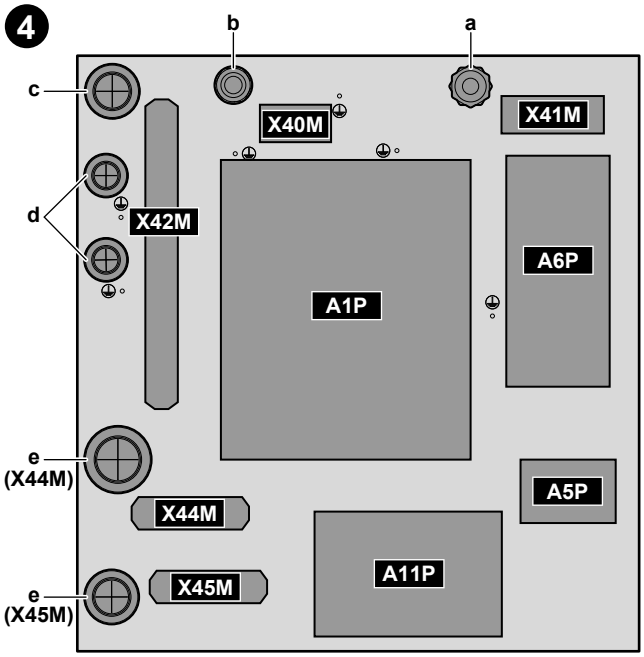

❶	Entry into the unit (from the top)
❷	Strain relief (cable ties)
❸	Entry into the switch box (from the back) + strain relief (cable ties or cable glands)
❹	Terminal blocks and PCBs (inside the switch box): ▪ A1P: Hydro PCB ▪ A5P: Power supply PCB ▪ A6P: Multistep backup heater PCB ▪ A11P: Interface PCB

Cables

Note: For the Ethernet cable, see "9.3.16 To connect the Ethernet cable (Modbus / LAN)" [▸ 139].

#	Cable	Terminal block
a	Backup heater power supply	X41M
b	Interconnection cable (= main power supply)	X40M
c	Normal kWh rate power supply for the indoor unit (in case the outdoor unit is connected to a preferential kWh rate power supply)	X42M

#	Cable	Terminal block
d	High voltage options: ▪ Heat pump convector (option kit) ▪ Room thermostat (option kit) ▪ Shut-off valve (field supply) ▪ Domestic hot water pump + extra external pumps (field supply) ▪ DHW ON signal (field supply) ▪ Alarm output (field supply) ▪ Changeover to external heat source control (field supply) ▪ Bivalent bypass pass (field supply) ▪ Space heat/cool operation control (field supply) ▪ Smart Grid (high voltage contacts) (field supply)	X42M
e	Low voltage options: ▪ Preferential power supply contact (field supply) ▪ Human Comfort Interface (option kit) ▪ Outdoor ambient temperature sensor (option kit) ▪ Indoor ambient temperature sensor (option kit) ▪ Electricity meters (field supply) ▪ Safety thermostat (field supply) ▪ Smart Grid (field supply)	X44M+X45M

INFORMATION

When installing field supply or option cables, foresee sufficient cable length. This will make it possible to remove/reposition the switch box and gain access to other components during service.

CAUTION

Do NOT push or place redundant cable length into the unit.

9.3.2 To connect the main power supply

NOTICE

Anti-blockage safety routine – Pumps and valves:

The following pumps and valves are equipped with an anti-blockage safety routine. This means that when the component is inactive (in case of pumps), closed (in case of shut-off valves) or at standstill (in case of bizone kit mixing valve) for 24 h, then the component will operate for a short period of time to ensure it does not get stuck.

- `Unit pump`
- `C/H secondary pump`
- `C/H pump ext. main`
- `C/H pump ext. add.`
- `Main zone shut-off valve`
- `Add. zone shut-off valve`
- `Bizone kit mixing valve`
- `Bizone kit direct pump`
- `Bizone kit mixed pump`

Note:

- To enable these anti-blockage safety routines, the unit must be connected to the power supply all year round.
- During maintenance mode the anti-blockage safety routine does not run.
- When an anti-blockage safety routine is initiated for one component (pump or shut-off valve) in a specific zone, the other component in that zone, if installed, will also be deblocked. **Example:** If the pump of the main zone is being deblocked, the shut-off valve of that zone will also be deblocked.

This topic describes 2 possible ways to connect the main power supply:

- In case of normal kWh rate power supply
- In case of preferential kWh rate power supply

In case the outdoor unit is connected to a normal kWh rate power supply

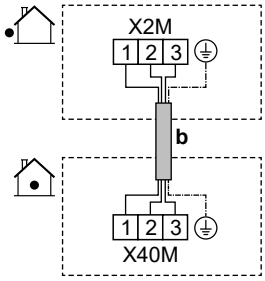

	b	Interconnection cable (= main power supply) (outdoor unit connected to a normal kWh rate power supply)	▪ Follow cable route ⓑ→ in "9.3.1 To connect the electrical wiring to the indoor unit" [▸ 120]. ▪ Wires: (3+GND)×1.5 mm²
MMI	—		

In case the outdoor unit is connected to a preferential kWh rate power supply

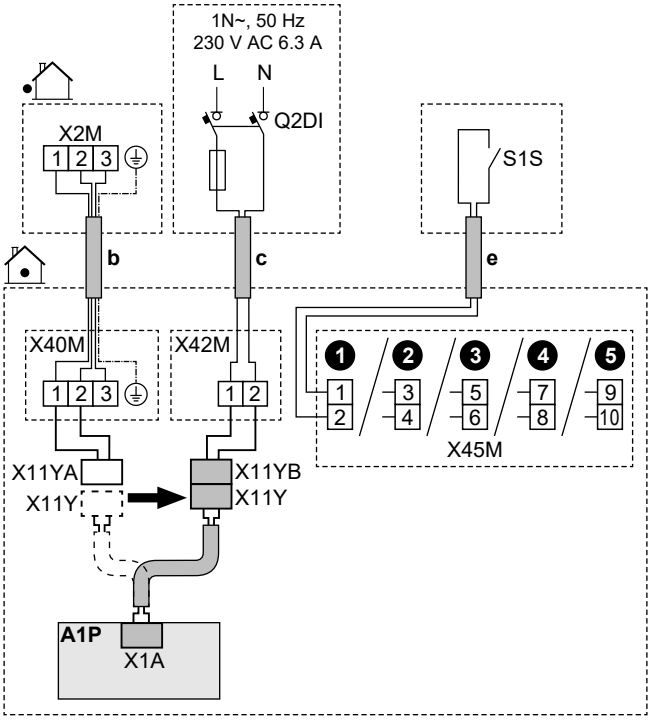

	b	Interconnection cable (= main power supply) (outdoor unit connected to a preferential kWh rate power supply)	▪ Follow cable route ⓑ→ in "9.3.1 To connect the electrical wiring to the indoor unit" [▸ 120]. ▪ Wires: (3+GND)×1.5 mm²
	c	Normal kWh rate power supply for the indoor unit	▪ Follow cable route ⓒ→ in "9.3.1 To connect the electrical wiring to the indoor unit" [▸ 120]. ▪ Wires: 2×1.5 mm² ▪ Maximum running current: 6.3 A ▪ Recommended field fuse: 16 A
			▪ Q2DI: Earth leakage circuit breaker / residual current device In the power supply line, ALWAYS install a residual current device (RCD) that complies with the national wiring regulation. This MUST be an RCD of 30 mA with an instantaneous action, unless otherwise defined by the national wiring regulation.
	e	Preferential kWh rate power supply contact (S1S)	▪ Follow cable route ⓔ→ in "9.3.1 To connect the electrical wiring to the indoor unit" [▸ 120]. ▪ Wires: 2×(0.75~1.25 mm²) ▪ Maximum length: 50 m. ▪ Preferential kWh rate power supply contact: 16 V DC detection (voltage supplied by PCB). The voltage-free contact shall ensure the minimum applicable load of 15 V DC, 10 mA. ▪ This is a `Field IO` input connection. See "9.1.6 `Field IO` connections" [▸ 109].
	X11Y	▪ Disconnect X11Y from X11YA. ▪ Connect X11Y to X11YB.	
MMI	▪ [13] `Field IO` (`HP Tariff Contact`) ▪ [9.14.1] `Operation mode` (`Heat pump tariff`)		

9.3.3 To connect the backup heater power supply

WARNING

The backup heater MUST have a dedicated power supply and MUST be protected by the safety devices required by the applicable legislation.

WARNING

Take care when installing a fuse <10 A.

Refer to setting [10.8] `Configuration wizard` - `Backup heater` so a correct limitation is applied.

CAUTION

To guarantee the unit is completely earthed, ALWAYS connect the backup heater power supply and the earth cable.

NOTICE

If the backup heater is not powered, then:

- Space heating and tank heat-up is not allowed.
- Error AA-01 (`Backup heater overheated or BUH power cable not connected`) is generated.

NOTICE

The output of the backup heater depends on the wiring and the selection in the user interface. Make sure that the power supply matches the selection in the user interface.

Possible layouts

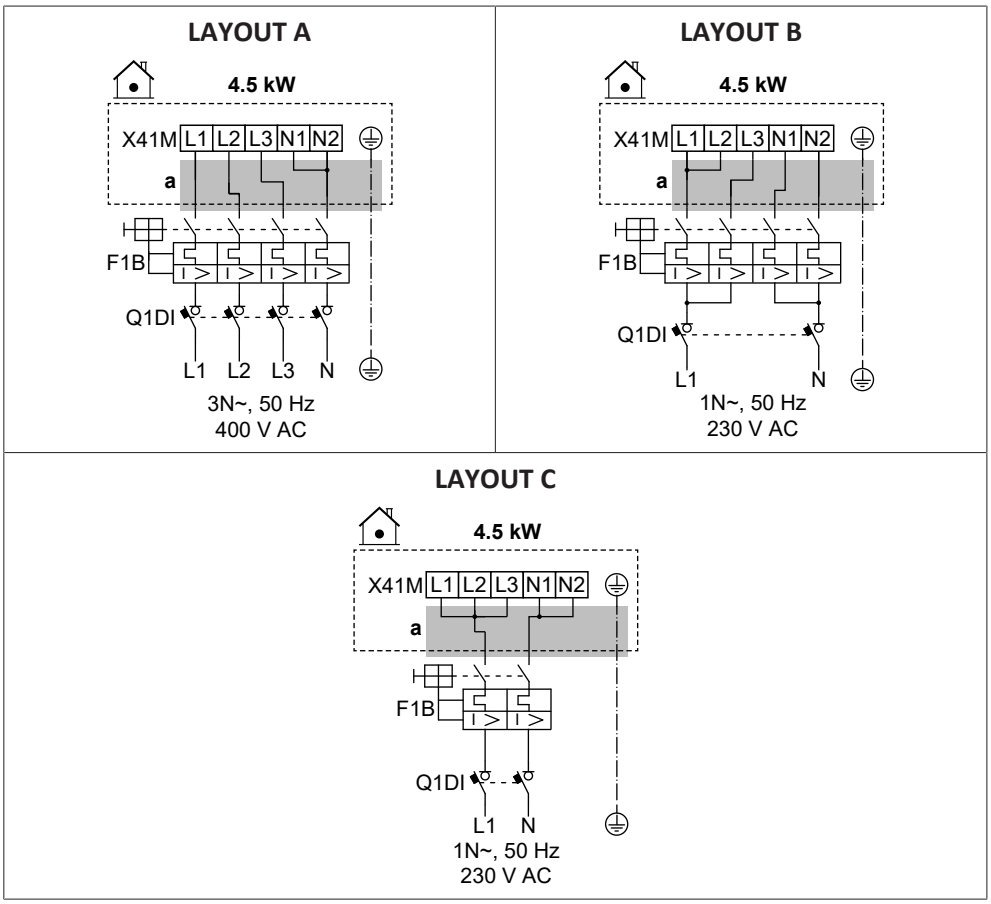

LAYOUT D	LAYOUT E
For this layout, you need option kit EKBUKRW3.	For this layout, you need option kit EKBUKRW1.

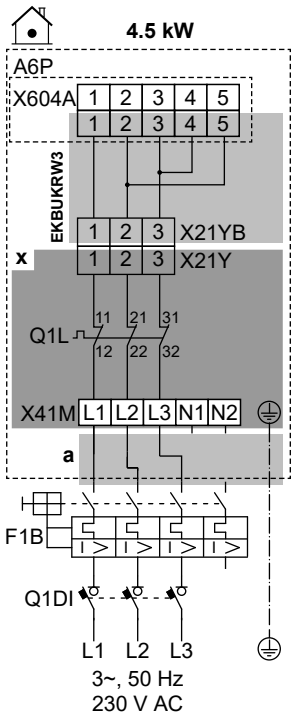

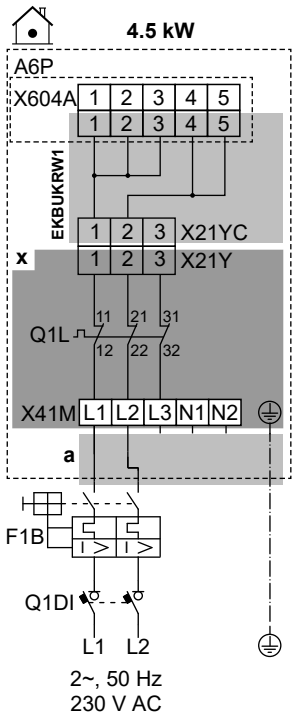

	a	Follow cable route ⓐ→ in "9.3.1 To connect the electrical wiring to the indoor unit" [▸ 120].
	x	Factory-mounted
	EKBUKRW1	Option kit: Backup heater wire harness for a 2-phase 230 V without N power supply. To be used instead of the factory-mounted wire harness (with connector X21YA).
	EKBUKRW3	Option kit: Backup heater wire harness for a 3-phase 230 V without N power supply. To be used instead of the factory-mounted wire harness (with connector X21YA).
	F1B	Overcurrent fuse (field supply)
	Q1DI	Earth leakage circuit breaker (field supply)
	Q1L	Thermal protector backup heater
MMI	[5.5] `Backup heater`	

Specifications of wiring components

Component		LAYOUT				
		A	B	C	D	E
Power supply	Voltage	390-410 V	220-240 V			
	Power	4.5 kW				
	Rated current	6.5 A	13 A	19.6	17 A[(a)]	19.6 A[(a)]
	Phase	3N~	1N~		3~	2~
	Frequency	50 Hz				
Wire size		MUST comply with national wiring regulation				
		Wire size based on the current, but minimum 2.5 mm²		Min. 4 mm²	Wire size based on the current, but minimum 2.5 mm²	Min. 4 mm²
		5-core cable		3-core cable	4-core cable	3-core cable
		3L+N+GND	2L+2N+GND	L+N+GND	3L+GND	2L+GND
Recommended overcurrent fuse		4-pole 10A	4-pole 16A	2-pole 25A	4-pole 20A	2-pole 25A
Earth leakage circuit breaker / residual current device		In the power supply line, ALWAYS install a residual current device (RCD) that complies with the national wiring regulation. This MUST be an RCD of 30 mA with an instantaneous action, unless otherwise defined by the national wiring regulation.				

[(a)] Electrical equipment complying with EN/IEC 61000-3-12 (European/International Technical Standard setting the limits for harmonic currents produced by equipment connected to public low-voltage systems with input current >16 A and ≤75 A per phase).

9.3.4 To connect the normally closed shut-off valve (inlet leak stop)

NOTICE

The shut-off valve (inlet leak stop) is equipped with an anti-blockage safety routine. To enable this routine, the unit must be connected to the power supply all year round. This routine operates as follows every 14 days after the last execution:

- If the unit is not operational, the anti-blockage safety routine is executed (i.e. the valve closes for a short period of time).
- If the unit is operational, the anti-blockage safety routine is postponed for a maximum of 7 days. If the unit is still operational after these 7 days, the unit will be temporarily forced to stop in order to execute the anti-blockage safety routine.

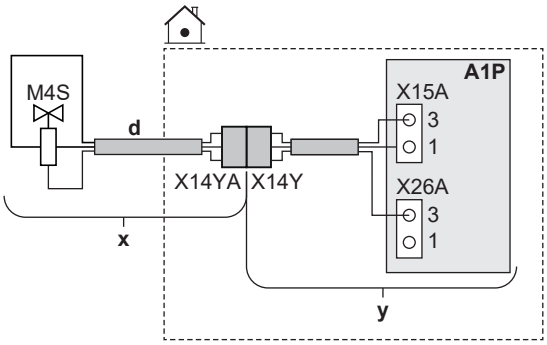

	x	Delivered as accessory
	y	Factory-mounted
	d	Follow cable route ⓓ→ in "9.3.1 To connect the electrical wiring to the indoor unit" [▸ 120].
	M4S	Normally closed shut-off valve (inlet leak stop)
	X14Y	Connect X14YA to X14Y.
MMI	—	

9.3.5 To connect the shut-off valve

INFORMATION

Shut-off valve usage example. In case of one LWT zone, and a combination of underfloor heating and heat pump convectors, install a shut-off valve before the underfloor heating to prevent condensation on the floor during cooling operation.

NOTICE

Wiring is different for a NC (normally closed) valve and a NO (normally open) valve.

In case of normally closed shut-off valves

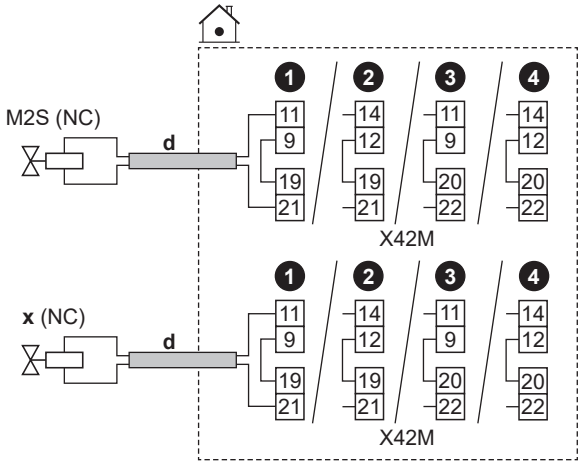

In case of normally open shut-off valves

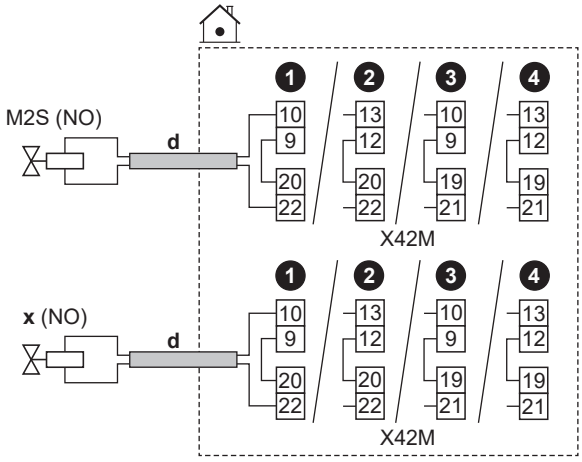

	d	▪ Follow cable route ⓓ→ in "9.3.1 To connect the electrical wiring to the indoor unit" [▸ 120]. ▪ Wires: (2 + bridge)×0.75 mm² ▪ This is a `Field IO` output connection. See "9.1.6 `Field IO` connections" [▸ 109].	
	M2S	Shut-off valve for the main zone	▪ Maximum running current: 0.3 A ▪ 230 V AC supplied by PCB
	x	Shut-off valve for the additional zone	
	NC	Normally closed	
	NO	Normally open	
MMI	▪ [13] `Field IO`: - `Main zone shut-off valve` - `Add. zone shut-off valve` ▪ [6.4.22] `Main zone shut-off valve` (actuator status, read-only) ▪ [6.4.23] `Add. zone shut-off valve` (actuator status, read-only)		

9.3.6 To connect the pumps (DHW pump and/or external pumps)

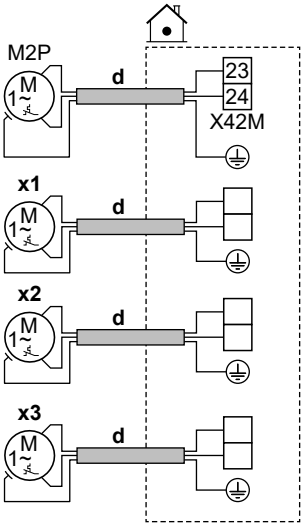

	d	▪ Follow cable route ⓓ→ in "9.3.1 To connect the electrical wiring to the indoor unit" [▸ 120]. ▪ Wires: (2+GND)×0.75 mm² ▪ This is a `Field IO` output connection. See "9.1.6 `Field IO` connections" [▸ 109].	
	M2P	DHW pump: ▪ Maximum load: 2 A (inrush), 230 V AC, 1 A (continuous)	
	x1	Extra external pumps	Use the terminal pins of any of the other `Field IO` outputs. However, you must also check if you need to install a relay in-between.
	x2		
	x3		

MMI	▪ [13] `Field IO` - `DHW pump`: Pump used for instant hot water and/or disinfection operation. In this case you must also specify the functionality in setting [4.13] `DHW pump`: * `Instant hot water` * `Disinfection` * `Both` - `C/H secondary pump`: Pump runs when there is a request from the main or additional zone. - `C/H pump ext. main`: Pump runs when there is a request from the main zone. - `C/H pump ext. add.`: Pump runs when there is a request from the additional zone. ▪ [4.26] `DHW pump schedule` ▪ [6.4.24] `C/H secondary pump` (actuator status, read-only) ▪ [6.4.25] `C/H pump ext. main` (actuator status, read-only) ▪ [6.4.26] `C/H pump ext. add.` (actuator status, read-only)

9.3.7 To connect the domestic hot water ON signal

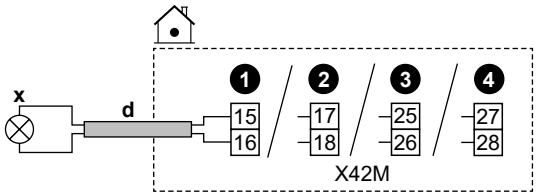

	d	▪ Follow cable route ⓓ→ in "9.3.1 To connect the electrical wiring to the indoor unit" [▸ 120]. ▪ Wires: 2×0.75 mm² ▪ This is a `Field IO` output connection. See "9.1.6 `Field IO` connections" [▸ 109].
	x	Domestic hot water ON signal (= unit is running in DHW operation): ▪ Maximum load: 0.3 A, 250 V AC
MMI		▪ [13] `Field IO` (`DHW On signal`)

9.3.8 To connect the alarm output

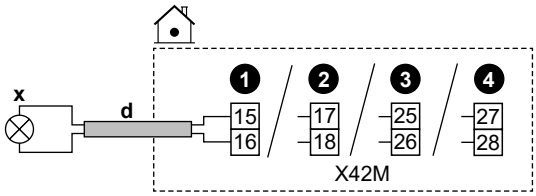

	d	▪ Follow cable route ⓓ→ in "9.3.1 To connect the electrical wiring to the indoor unit" [▸ 120]. ▪ Wires: 2×0.75 mm² ▪ This is a `Field IO` output connection. See "9.1.6 `Field IO` connections" [▸ 109].
	x	Alarm output: ▪ Maximum load: 0.3 A, 250 V AC
MMI	▪ [13] `Field IO` (`Alarm`)	

9.3.9 To connect the space cooling/heating ON/OFF output

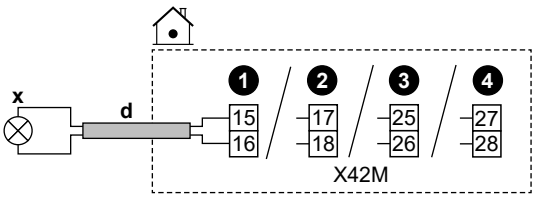

	d	▪ Follow cable route ⓓ→ in "9.3.1 To connect the electrical wiring to the indoor unit" [▸ 120]. ▪ Wires: 2×0.75 mm² ▪ This is a `Field IO` output connection. See "9.1.6 `Field IO` connections" [▸ 109].
	x	Space cooling/heating ON/OFF output: ▪ Maximum load: 0.3 A, 250 V AC
MMI	▪ [13] `Field IO` (`Cooling/Heating mode`)	

9.3.10 To connect the changeover to external heat source

INFORMATION

Bivalent is ONLY possible in case of ONE leaving water temperature zone with:

- room thermostat control, OR
- external room thermostat control.

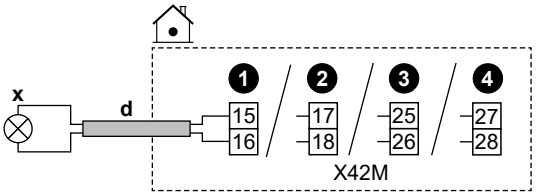

	d	▪ Follow cable route ⓓ→ in "9.3.1 To connect the electrical wiring to the indoor unit" [▸ 120]. ▪ Wires: 2×0.75 mm² ▪ This is a `Field IO` output connection. See "9.1.6 `Field IO` connections" [▸ 109].
	x	Changeover to external heat source: ▪ Maximum load: 0.3 A, 250 V AC ▪ Minimum load: 20 mA, 5 V DC

MMI	▪ [13] `Field IO` (`External heat source`) ▪ [5.14] `Bivalent` ▪ [5.37] `Bivalent present` (ON)

9.3.11 To connect the bivalent bypass valve

NOTICE

Wiring is different for a NC (normally closed) valve and a NO (normally open) valve.

In case of normally closed bivalent bypass valves

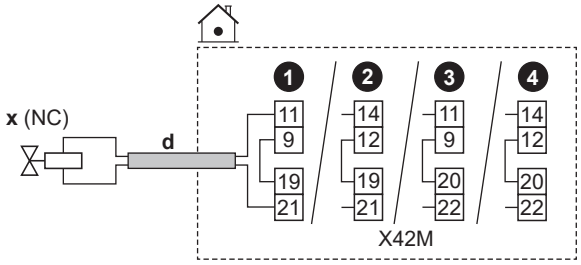

In case of normally open bivalent bypass valves

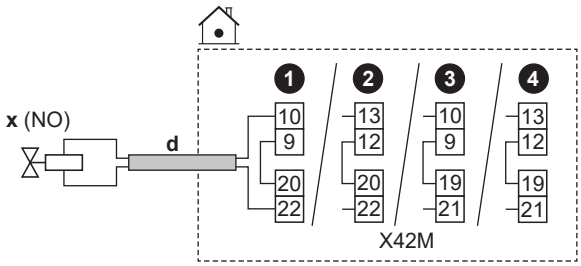

	d	▪ Follow cable route ⓓ→ in "9.3.1 To connect the electrical wiring to the indoor unit" [▸ 120]. ▪ Wires: (2 + bridge)×0.75 mm² ▪ This is a `Field IO` output connection. See "9.1.6 `Field IO` connections" [▸ 109].
	x	Bivalent bypass valve (activated when bivalent is active): ▪ Maximum running current: 0.3 A ▪ 230 V AC supplied by PCB
	NC	Normally closed
	NO	Normally open
MMI		▪ [13] `Field IO` (`Bivalent bypass valve`) ▪ [5.14] `Bivalent` ▪ [5.37] `Bivalent present` (ON) ▪ [6.4.21] `Bivalent bypass valve` (actuator status, read-only)

9.3.12 To connect the electricity meters

INFORMATION

This functionality is NOT available in early versions of the user interface software.

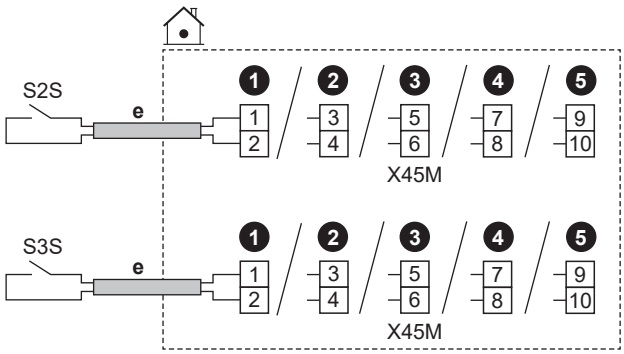

	e	▪ Follow cable route ⓔ→ in "9.3.1 To connect the electrical wiring to the indoor unit" [▸ 120]. ▪ Wires: 2 (per meter)×0.75 mm² ▪ This is a `Field IO` input connection. See "9.1.6 `Field IO` connections" [▸ 109].	
	S2S	Electricity meter 1	12 V DC pulse detection (voltage supplied by PCB)
	S3S	Electricity meter 2	
MMI			

9.3.13 To connect the safety thermostat

Connect a safety thermostat to the unit, to prevent that too high temperatures go to the respective zone.

Remark: In case of 2 LWT zones with a bizone kit, you need to connect a second safety thermostat (for the main zone) to the bizone kit control box (EKMIKPOA), to prevent that too high temperatures go to the main zone.

For more information about the safety thermostat for the main zone, see "6.2.3 Multiple rooms – Two LWT zones" [▸ 53].

NOTICE

Make sure to select and install the safety thermostat according to the applicable legislation.

In any case, to prevent unnecessary tripping of the safety thermostat, we recommend the following:

- The safety thermostat is automatically resettable.
- The safety thermostat has a maximum temperature variation rate of 2°C/min.
- The safety thermostat tripping point should be selected in line with the overheating limit.
- There is a minimum distance of 2 m between the safety thermostat and the 3-way valve.

INFORMATION

The maximum leaving water temperature is decided based on setting [3.12] `Overheating setpoint`. This limit defines the maximum leaving water **in the system**. Depending on the value of this setting, the maximum LWT setpoint will also be reduced by 5°C to allow stable control towards the setpoint.

The maximum leaving water temperature **in the main zone** is decided based on setting [1.19] `Overheating water circuit`, only in case [3.13.5] `Bizone kit installed` is enabled. This limit defines the maximum leaving water **in the main zone**. Depending on the value of this setting, the maximum LWT setpoint will also be reduced by 5°C to allow stable control towards the setpoint.

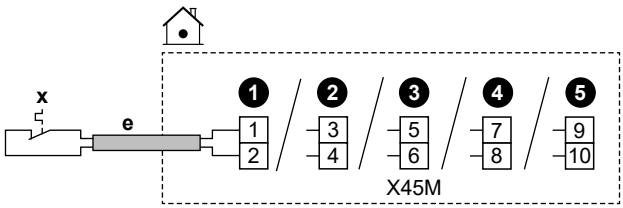

	e	▪ Follow cable route ⓔ→ in "9.3.1 To connect the electrical wiring to the indoor unit" [▸ 120]. ▪ Wires: 2×0.75 mm² ▪ Maximum length: 50 m ▪ This is a `Field IO` input connection. See "9.1.6 `Field IO` connections" [▸ 109].	
	x	Safety thermostat contact for the unit	16 V DC detection (voltage supplied by PCB). The voltage-free contact shall ensure the minimum applicable load of 15 V DC, 10 mA.
MMI	[13] `Field IO` (`Safety thermostat unit`)		

9.3.14 Smart Grid

INFORMATION

The Smart Grid photovoltaic power pulse meter (S4S) functionality is NOT available in early versions of the user interface software.

This topic describes different ways to connect the indoor unit to a Smart Grid:

Smart Grid contacts:

- In case of low voltage Smart Grid contacts.
- In case of high voltage Smart Grid contacts. This requires the installation of **2 relays** from the Smart Grid relay kit (EKRELSG).

The 2 incoming Smart Grid contacts can activate the following Smart Grid modes:

1	2	SG ready 1.0 operation mode
0	0	`Free running`
0	1	`Forced off`
1	0	`Recommended on`
1	1	`Forced on`
1	**2**	**SG ready 1.1 operation mode**
0	1	Operating state 1
1	1	
0	0	Operating state 2
1	0	Operating state 3

Smart Grid meter: ▪ In case of low voltage Smart Grid meter. ▪ In case of high voltage Smart Grid meter. This requires the installation of **1 relay** from the Smart Grid relay kit (EKRELSG).	If the Smart Grid meter is active, the heat pump and the additional electrical heat sources are allowed to operate if the limit allows it. **Note:** ▪ It is possible that in some cases this limit towards the heat pump will be ignored for reliability reasons (e.g. heat pump start-up and defrost). ▪ If the backup heater needs to support for protective reasons, the backup heater will kick in with at least a capacity of 2 kW (to ensure reliable operation) even if the power limit would be exceeded.

The related settings in case of **Smart Grid contacts** are as follows:

	▪ [13] `Field IO`: - `HV/LV Smart Grid Contact 1` - `HV/LV Smart Grid Contact 2` ▪ [9.14] `Demand response` ▪ [9.14.1] `Operation mode` (`Smart Grid ready contacts`)

The related settings in case of **Smart Grid meter** are as follows:

	▪ [13] `Field IO` (`Smart Meter Contact`) ▪ [9.14.1] `Operation mode` (`Smart Meter Contact`) ▪ [9.14.7] `Smart meter limit`

Connections in case of low voltage Smart Grid contacts

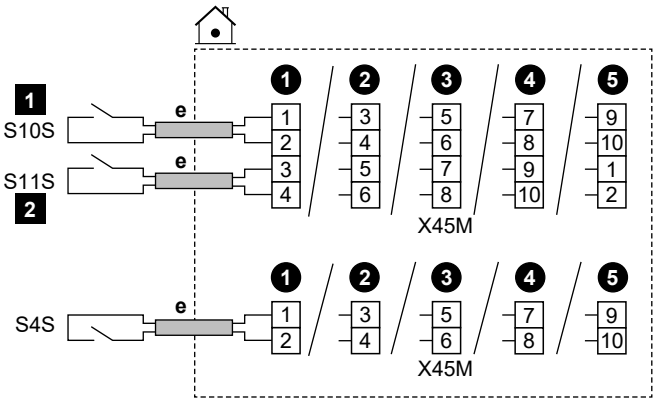

	e	▪ Follow cable route ⓔ→ in "9.3.1 To connect the electrical wiring to the indoor unit" [▸ 120]. ▪ Wires: 0.5 mm² ▪ This is a `Field IO` input connection. See "9.1.6 `Field IO` connections" [▸ 109].
	S4S	Smart Grid photovoltaic power pulse meter
	S10S / 1	Low voltage Smart Grid contact 1
	S11S / 2	Low voltage Smart Grid contact 2

Connections in case of high voltage Smart Grid contacts

1 Install 2 relays from the Smart Grid relay kit (EKRELSG) as follows:

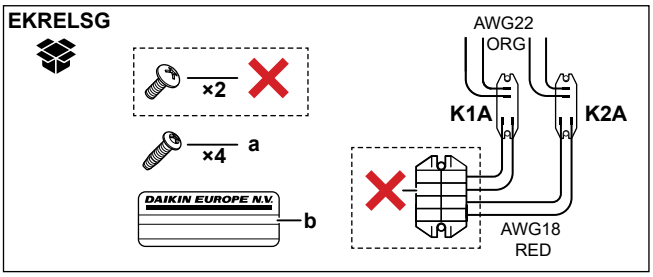

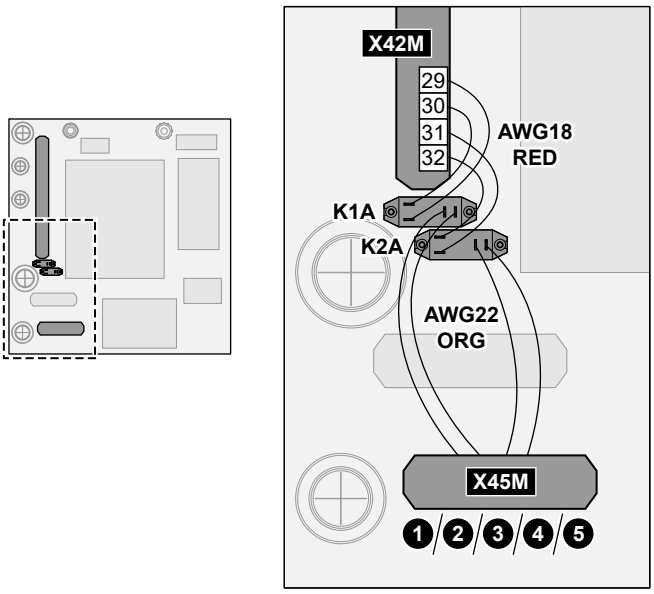

	a	Screws for K1A and K2A
	b	Sticker to put on the high voltage wires
	AWG22 ORG	Wires (AWG22 orange) coming from the contact sides of the relays; to be connected to X45M
	AWG18 RED	Wires (AWG18 red) coming from the coil sides of the relays; to be connected to X42M
	K1A, K2A	Relays
	✕	NOT needed

2 Connect as follows:

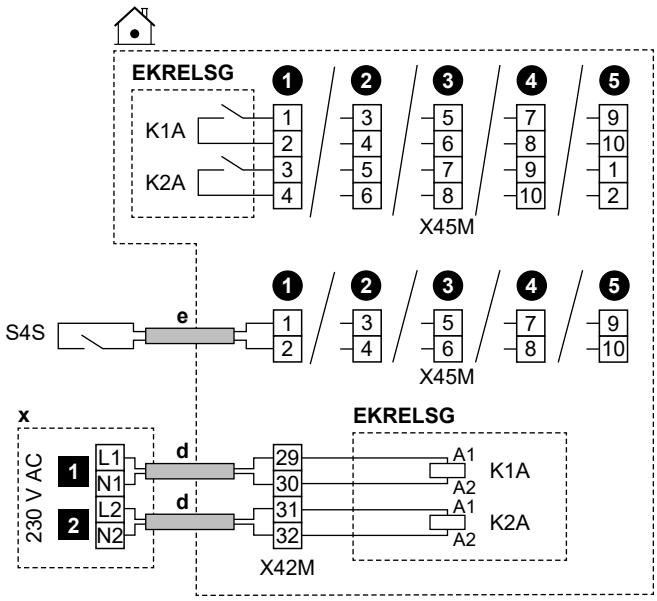

	d	▪ Follow cable route ⓓ→ in "9.3.1 To connect the electrical wiring to the indoor unit" [▸ 120]. ▪ Wires: 1 mm²
	e	▪ Follow cable route ⓔ→ in "9.3.1 To connect the electrical wiring to the indoor unit" [▸ 120]. ▪ Wires: 0.5 mm²
	x	230 V AC control device
	EKRELSG	Smart Grid relay kit This is a `Field IO` input connection. See "9.1.6 `Field IO` connections" [▸ 109].
	S4S	Smart Grid photovoltaic power pulse meter This is a `Field IO` input connection. See "9.1.6 `Field IO` connections" [▸ 109].
	1	High voltage Smart Grid contact 1
	2	High voltage Smart Grid contact 2

Connections in case of low voltage Smart Grid meter

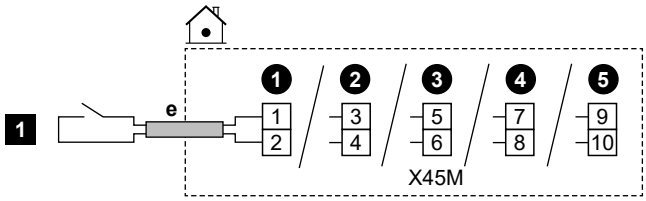

	e	▪ Follow cable route ⓔ→ in "9.3.1 To connect the electrical wiring to the indoor unit" [▸ 120]. ▪ Wires: 0.5 mm² ▪ This is a `Field IO` input connection. See "9.1.6 `Field IO` connections" [▸ 109].
	1	Low voltage Smart Grid meter

Connections in case of high voltage Smart Grid meter

1 Install 1 relay (K1A) from the Smart Grid relay kit (EKRELSG). (see above: Connections in case of high voltage Smart Grid contacts).

2 Connect as follows:

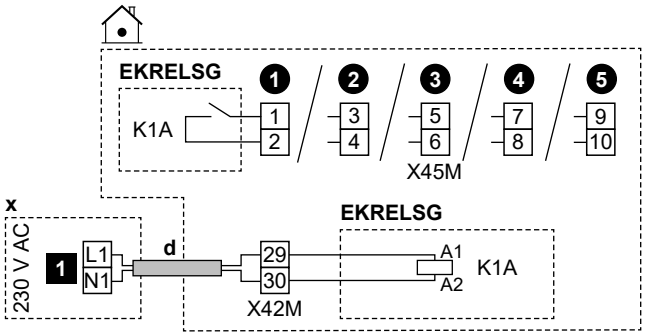

	d	▪ Follow cable route ⓓ→ in "9.3.1 To connect the electrical wiring to the indoor unit" [▸ 120]. ▪ Wires: 1 mm²
	x	230 V AC control device
	EKRELSG	Smart Grid relay kit This is a `Field IO` input connection. See "9.1.6 `Field IO` connections" [▸ 109].
	1	High voltage Smart Grid meter

9.3.15 To connect the WLAN cartridge (delivered as accessory)

MMI	[8.3] `Wireless gateway`

1 Insert the WLAN cartridge into the cartridge slot on the user interface of the indoor unit.

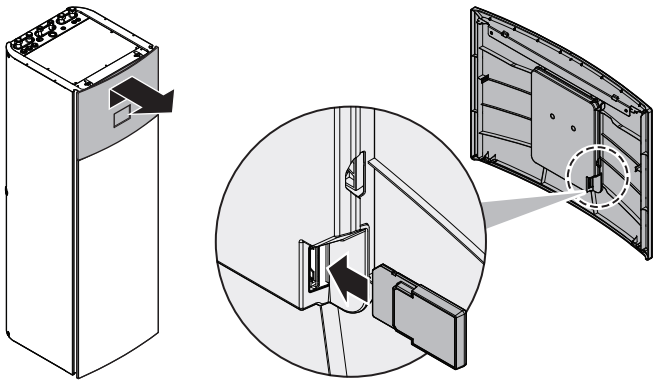

9.3.16 To connect the Ethernet cable (Modbus / LAN)

Use minimum Cat 6a Ethernet cable with the following features:

- U/UTP (= unshielded)
- Connector: RJ45 male to RJ45 male

Note:

- It is recommended that the cable includes (moulded) strain relief to prevent damage in tight routing spaces.
- Maximum cable length: 100 m.

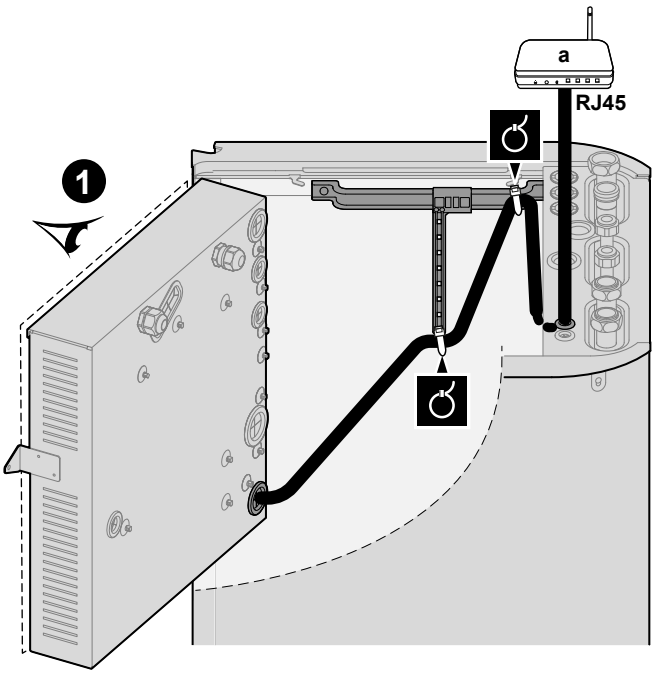

a Home router

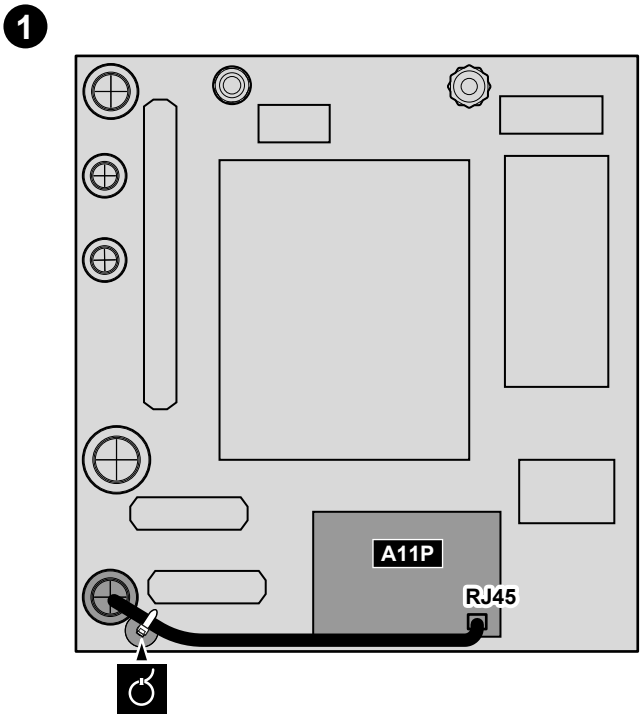

Ferrite cores

In case of EPVX10+14: Put the ferrite cores (TRM-31-20-15E-WE and GRFC-10 delivered as accessory) on the Ethernet cable as shown, as close to the RJ45 connector as possible.

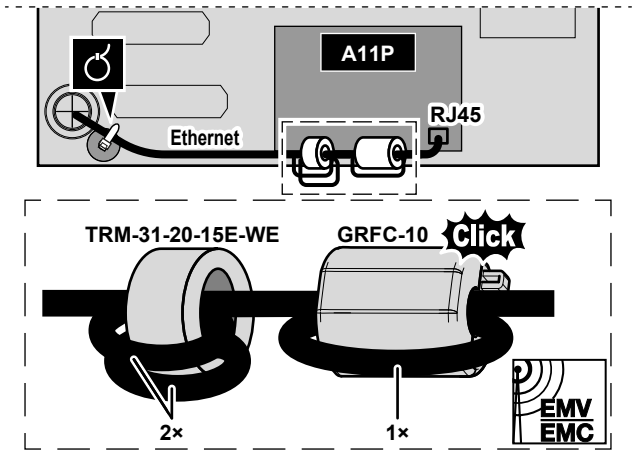
A11P
RJ45
Ethernet
TRM-31-20-15E-WE
GRFC-10
Click
2×
1×
EMV
EMC

10 Configuration

This chapter explains only basic configuration done via the configuration wizard. For more detailed explanation and background information, see the configuration reference guide.

User mode vs. Installer mode

On the home screen, and most other screens where applicable, you can toggle between user mode and installer mode.

	User mode
	Installer mode. Pin code: 5678

Menu structure vs. Overview field settings

You can access the installer settings using two different methods. However, NOT all settings are accessible via both methods.

Via the menu structure (with breadcrumbs):

1. From the home screen, use the navigation buttons ❮ ⌂ ◦ ◦ ❯.
2. Go to any of the menus:

[1] `Main zone`	[8] `Connectivity`
[2] `Additional zone`	[9] `Energy`
[3] `Heating/cooling`	[10] `Configuration wizard`
[4] `Domestic hot water`	[11] `Malfunctioning`
[5] `Settings`	[12] NOT USED
[6] `Information`	[13] `Field IO`
[7] `Maintenance mode`	

Via the overview of the field settings:

1. Go to [5.7]: `Settings` > `Overview field settings`.
2. Go to the wanted field setting. Where applicable, the field setting codes are described in the configuration reference guide. **Example:** Go to **005** for the water pipe freeze prevention function. Field codes that are not applicable are greyed out.
3. Select the wanted value.

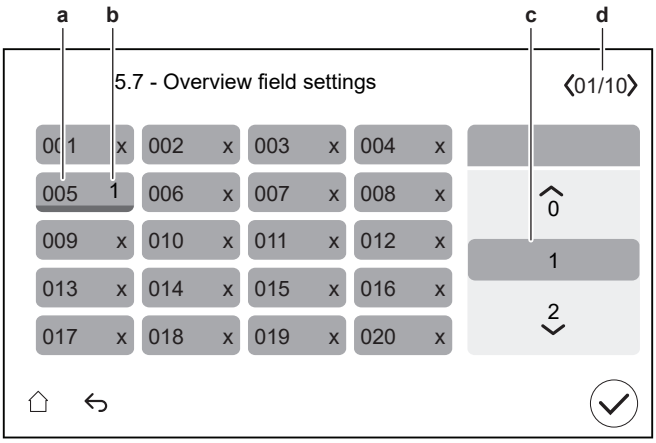

a Field setting code
b Selected value
c To select the wanted value
d To browse through the different pages

10.1 Configuration wizard

After first power ON of the system, the user interface starts a configuration wizard. Use this wizard to set the most important initial settings for the unit to run properly.

- If needed, you can restart the configuration wizard via the menu structure: [10] `Configuration wizard`.
- If needed, you can afterwards configure more settings via the menu structure.

Configuration wizard – Overview

Depending on your unit type and the selected settings, some steps will not be visible (**Note:** [10.2] is not used).

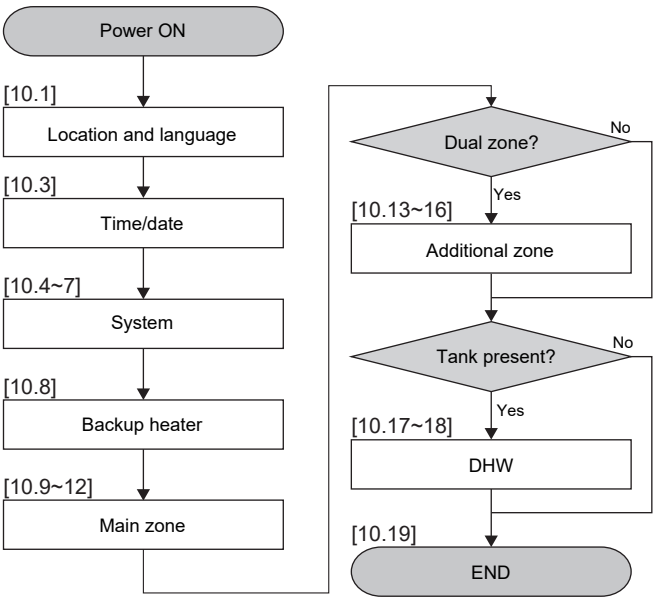

After you completed all steps in the wizard, the user interface will show an error message instructing to enter the Digital Key (i.e. perform the unlocking procedure). See "11.4.1 To unlock the outdoor unit (compressor)" [▸ 161].

[10.1] `Location and language`

Set:

- `Country`
- `Language`

  Note: The default `Language` is indicated with a white circle at the left side of the selector.

[10.2] NOT USED

[10.3] `Time/date`

Set:

- Date
- Clock format (24 hours or AM/PM)
- Time
- `Daylight savings time` (ON/OFF)

[10.4] `System` 1/4

Set:

- `Number of zones`
- `Bivalent`

Number of zones

The system can supply leaving water to up to 2 water temperature zones. During configuration, the number of water zones must be set.

- `Single zone`

  Only one leaving water temperature zone.

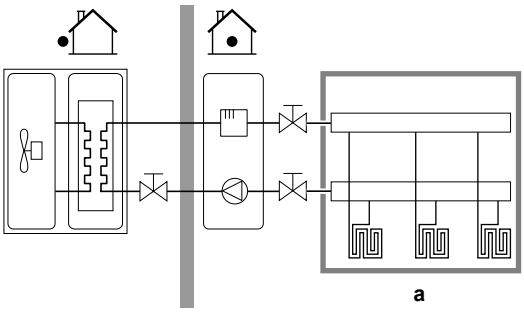

a Main LWT zone

- `Dual zone`

  Two leaving water temperature zones. In heating, the main leaving water temperature zone consists of the lowest temperature heat emitters and a mixing station to achieve the desired leaving water temperature.

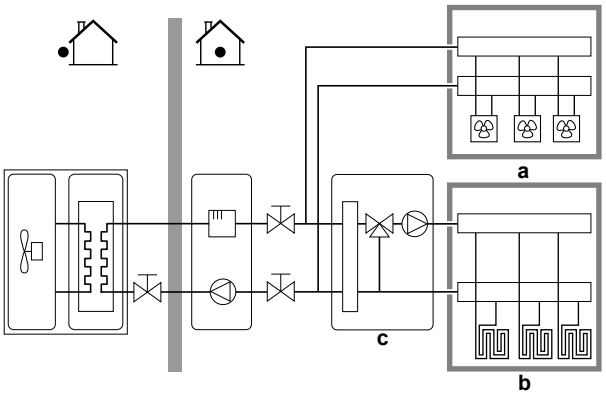

a Additional LWT zone: Highest temperature

b Main LWT zone: Lowest temperature

c Mixing station

INFORMATION

Mixing station. If your system layout contains 2 LWT zones, you can install a mixing station in front of the main LWT zone. However, other dual zone applications with shut-off valves are also possible. For more information, see the application guidelines in the installer reference guide.

NOTICE

NOT configuring the system in the following way can cause damage to the heat emitters. If there are 2 zones, it is important that in heating:

- the zone with the lowest water temperature is configured as the main zone, and
- the zone with the highest water temperature is configured as the additional zone.

NOTICE

If there are 2 zones and the emitter types are wrongly configured, water of high temperature can be sent towards a low temperature emitter (underfloor heating). To avoid this:

- Install an aquastat/thermostatic valve to avoid too high temperatures towards a low temperature emitter.
- Make sure you set the emitter types for the main zone and for the additional zone correctly in accordance with the connected emitter.

Bivalent

Must match your system layout. Is an external heat source (bivalent) installed? For more information, see the application guidelines in the installer reference guide, and the settings in the configuration reference guide ([5.14] `Bivalent`).
ON (installed) / OFF (not installed)

[10.5] `System` 2/4

Restriction: This screen is only shown when in step [10.4] `System` 1/4, `Bivalent` is set to ON.

Set `Bivalent bypass valve`:

- choose between the standard `Field IO` possibilities.
- For the electrical connection of the `Bivalent bypass valve`, see "9.3.11 To connect the bivalent bypass valve" [▶ 133].

[10.6] `System` 3/4

Not applicable.

[10.7] `System` 4/4

Set `Emergency selection`.

Emergency selection

When a heat pump failure occurs, then this setting (same as setting [5.23]) defines whether the electrical heater (backup heater / booster heater / tank boiler if applicable) can take over the space heating and DHW operation.

When there is no automatic full take-over by the electrical heater, a pop-up (with the same content as setting [5.30]) appears where you can manually acknowledge that the electrical heater can fully take over (i.e. space heating to normal setpoint and DHW operation = ON).

When the house is unattended for longer periods, we recommend to use `auto SH reduced/DHW off` to keep energy consumption low.

[5.23]	When heat pump failure occurs, then there is … by the electrical heater	Full take-over
`Manual`	No take-over: ▪ Space heating = OFF ▪ DHW operation = OFF	After manual acknowledgment
`Automatic`	Full take-over: ▪ Space heating to normal setpoint ▪ DHW operation = ON	Automatic
`auto SH reduced/DHW on`	Partial take-over: ▪ Space heating to reduced setpoint ▪ DHW operation = ON	After manual acknowledgment
`auto SH reduced/DHW off`	Partial take-over: ▪ Space heating to reduced setpoint ▪ DHW operation = OFF	After manual acknowledgment
`auto SH normal/DHW off`	Partial take-over: ▪ Space heating to normal setpoint ▪ DHW operation = OFF	After manual acknowledgment

INFORMATION

If a heat pump failure occurs and `Emergency selection` is NOT set to `Automatic`, the following functions will remain active even if the user does NOT acknowledge emergency operation:

- Room frost protection
- Underfloor heating screed dryout
- Water pipe freeze prevention
- Disinfection

[10.8] Backup heater

Set:

- Grid configuration:
  - Single phase
  - Three phase 3x400V+N
  - Three phase 3x230V
- Maximum capacity:
  - Slider limited depending on grid configuration and fuse. **Note:** During defrost operation, the backup heater support may go up to the maximum capacity defined here. If needed, you can limit this value (but not lower than 2 kW to ensure reliable operation).
- Fuse >10A (ON/OFF)

The maximum capacity suggested by the user interface is based on the selected grid configuration and, if applicable, the size of the fuse. An installer can however lower the maximum capacity of the backup heater using the scroll list. The table below gives an overview of the dynamic maximums of the scroll list.

Grid configuration	Fuse >10A	Maximum capacity
Single phase	(greyed out)	Limited to 4.5 kW[(a)]
Three phase 3x400V+N	OFF	
	ON	
Three phase 3x230V	(greyed out)	

[(a)] But not lower than 2 kW.

[10.9] Main zone 1/4

Set:

- Emitter type
- Control

Emitter type

Must match your system layout. Emitter type of the main zone.
▪ Under floor heating ▪ Heat pump convector ▪ Radiator

The setting Emitter type influences the target delta T in heating as follows:

Emitter type Main zone	Target delta T in heating
Under floor heating	3~10°C
Heat pump convector	3~10°C
Radiator	10~20°C

Heating up or cooling down the main zone can take longer. This depends on:

- The water volume of the system
- The heater emitter type of the main zone

NOTICE

Average emitter temperature = Leaving water temperature – (Delta T)/2

This means that for a same leaving water temperature setpoint, the average emitter temperature of radiators is lower than that of underfloor heating because of a bigger delta T.

Example radiators: 40–10/2=**35°C**

Example underfloor heating: 40–5/2=**37.5°C**

To compensate, you can increase the weather-dependent curve desired temperatures.

INFORMATION

The maximum leaving water temperature is decided based on setting [3.12] `Overheating setpoint`. This limit defines the maximum leaving water **in the system**. Depending on the value of this setting, the maximum LWT setpoint will also be reduced by 5°C to allow stable control towards the setpoint.

The maximum leaving water temperature **in the main zone** is decided based on setting [1.19] `Overheating water circuit`, only in case [3.13.5] `Bizone kit installed` is enabled. This limit defines the maximum leaving water **in the main zone**. Depending on the value of this setting, the maximum LWT setpoint will also be reduced by 5°C to allow stable control towards the setpoint.

Control

Defines the unit control method for the main zone.
▪ `Leaving water`: Unit operation is decided based on the leaving water temperature regardless the actual room temperature and/or heating or cooling demand of the room. ▪ `External room thermostat`: Unit operation is decided by the external thermostat or equivalent (e.g. heat pump convector). ▪ `Room thermostat`: Unit operation is decided based on the ambient temperature of the dedicated Human Comfort Interface (BRC1HHDA used as room thermostat).

In case of external room thermostat control, you must also set [1.13] `External room thermostat` (`Input source` and `Connection type`):

`Input source`:

Must match your system layout. Input source of the external room thermostat for the main zone.
▪ `Hardware`: For external room thermostat connected to the unit. ▪ `External`: For Cloud and Modbus.

`Connection type`:

Restriction: Only applicable if [1.13] `Input source` = `Hardware`. Must match your system layout. External room thermostat type for the main zone.
▪ `Single contact`: The used external room thermostat can only send a thermo ON/OFF condition. There is no separation between heating or cooling demand. Select this value in case of a connection to the heat pump convector (FWX*). ▪ `Dual contact`: The used external room thermostat can send a separate heating/cooling thermo ON/OFF condition. Select this value in case of connection to multi-zoning wired controls, wired room thermostats (EKRTWA) or wireless room thermostats (EKRTRB).

> **NOTICE**
> If an external room thermostat is used, the external room thermostat will control the room frost protection.

[10.10] Main zone 2/4

Set:

- Heating setpoint mode:
  - Fixed
  - Weather dependent
- Cooling setpoint mode:
  - Fixed
  - Weather dependent

[10.11] Main zone 3/4 (Heating WD curve)

Defines the weather-dependent curve used to determine the leaving water temperature of the main zone in space heating operation.

Restriction: The curve is only used when Heating setpoint mode (main zone) = Weather dependent.

See "10.2 Weather-dependent curve" [▶ 151].

[10.12] Main zone 4/4 (Cooling WD curve)

Defines the weather-dependent curve used to determine the leaving water temperature of the main zone in space cooling operation.

Restriction: The curve is only used when Cooling setpoint mode (main zone) = Weather dependent.

See "10.2 Weather-dependent curve" [▶ 151].

[10.13] Additional zone 1/4

Set:

- Emitter type
- Control

Emitter type

Must match your system layout. Emitter type of the additional zone. For more information, see " [10.9] Main zone 1/4" [▶ 147].
▪ Under floor heating ▪ Heat pump convector ▪ Radiator

Control

Shows (read-only) the unit control method for the additional zone. It is determined by the unit control method for the main zone (see " [10.9] Main zone 1/4" [▶ 147]).

- `Leaving water` if the unit control method for the main zone is `Leaving water`.
- `External room thermostat` if the unit control method for the main zone is:
  - `External room thermostat`, or
  - `Room thermostat`

In case of external room thermostat control, you must also set [2.13] `External room thermostat` (`Input source` and `Connection type`):

`Input source`:

Must match your system layout. Input source of the external room thermostat for the additional zone.

- `Hardware`: For external room thermostat connected to the unit.
- `External`: For Cloud and Modbus.

`Connection type`:

Restriction: Only applicable if [2.13] `Input source` = `Hardware`.

Must match your system layout. External room thermostat type for the additional zone.

- `Single contact`: The used external room thermostat can only send a thermo ON/OFF condition. There is no separation between heating or cooling demand.

  Select this value in case of a connection to the heat pump convector (FWX*).
- `Dual contact`: The used external room thermostat can send a separate heating/cooling thermo ON/OFF condition.

  Select this value in case of connection to multi-zoning wired controls, wired room thermostats (EKRTWA) or wireless room thermostats (EKRTRB).

[10.14] `Additional zone` 2/4

Set:

- `Heating setpoint mode`:
  - `Fixed`
  - `Weather dependent`
- `Cooling setpoint mode`:
  - `Fixed`
  - `Weather dependent`

[10.15] `Additional zone` 3/4 (`Heating WD curve`)

Defines the weather-dependent curve used to determine the leaving water temperature of the additional zone in space heating operation.

Restriction: The curve is only used when `Heating setpoint mode` (additional zone) = `Weather dependent`.

See "10.2 Weather-dependent curve" [▶ 151].

[10.16] `Additional zone` 4/4 (`Cooling WD curve`)

Defines the weather-dependent curve used to determine the leaving water temperature of the additional zone in space cooling operation.

Restriction: The curve is only used when `Cooling setpoint mode` (additional zone) = `Weather dependent`.

See "10.2 Weather-dependent curve" [▸ 151].

[10.17] `Configuration wizard` – `DHW` 1/2

Set:

- `Operation mode`

Operation mode

Defines how the domestic hot water is prepared. The 3 different ways differ from each other by the way the desired tank temperature is set and how the unit acts upon it.
▪ `Reheat`: The tank can ONLY be heated by reheat operation. ▪ `Schedule and reheat`: The tank is heated according to a schedule and between the scheduled heat up cycles, reheat operation is allowed. ▪ `Scheduled`: The tank can ONLY be heated according to a schedule. For more information about the domestic hot water control, see the configuration reference guide.

INFORMATION

In case of wall-mounted units with standalone tank without internal booster heater:

There is a risk of space heating capacity shortage in case of frequent domestic hot water operation. Frequent and long space heating/cooling interruption will happen when selecting `Operation mode` = `Reheat` (only reheat operation allowed for the tank).

[10.18] `Configuration wizard` – `DHW` 2/2

Set:

- `Tank setpoint` (select value)
- `Hysteresis` (select value)

[10.19] `Configuration wizard`

`The configuration wizard is finished!`

`Please make sure that the commissioning check list in e-Care has been completed as well.`

10.2 Weather-dependent curve

10.2.1 What is a weather-dependent curve?

Weather-dependent operation

The unit operates 'weather-dependent' if the desired leaving water temperature is determined automatically by the outdoor temperature. It therefore is connected to a temperature sensor on the north wall of the building. If the outdoor temperature drops or rises, the unit compensates instantly. Thus, the unit does not have to wait for feedback by the thermostat to increase or decrease the temperature of the leaving water. Because it reacts more quickly, it prevents high rises and drops of the indoor temperature and water temperature at tap points.

Advantage

Weather-dependent operation reduces energy consumption.

Weather-dependent curve

To be able to compensate for differences in temperature, the unit relies on its weather-dependent curve. This curve defines how much the temperature of the leaving water must be at different outdoor temperatures. Because the slope of the curve depends on local circumstances such as climate and the insulation of the building, the curve can be adjusted by an installer or user.

Type of weather-dependent curve

The type of weather-dependent curve is "2-points curve".

Availability

The weather-dependent curve is available for:

- Main zone - Heating
- Main zone - Cooling
- Additional zone - Heating
- Additional zone - Cooling

10.2.2 Using weather-dependent curves

Related screens

The following table describes:

- Where you can define the different weather-dependent curves
- When the curve is used (restriction)

To define the curve, go to...	Curve is used when...
[1.8] `Main zone` > `Heating WD curve`	[1.5] `Heating setpoint mode` = `Weather dependent`
[1.9] `Main zone` > `Cooling WD curve`	[1.7] `Cooling setpoint mode` = `Weather dependent`
[2.8] `Additional zone` > `Heating WD curve`	[2.5] `Heating setpoint mode` = `Weather dependent`
[2.9] `Additional zone` > `Cooling WD curve`	[2.7] `Cooling setpoint mode` = `Weather dependent`

INFORMATION

Maximum and minimum setpoints

You cannot configure the curve with temperatures that are higher or lower than the set maximum and minimum setpoints for that zone. When the maximum or minimum setpoint is reached, the curve flattens out.

To define a weather-dependent curve

Define the weather-dependent curve using two setpoints (**b, c**). **Example:**

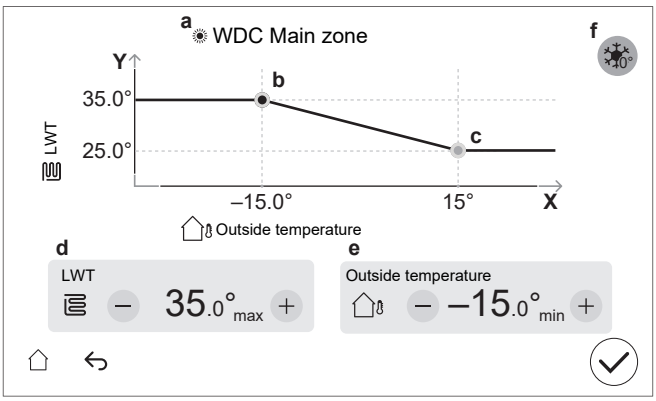

Item	Description
a	Selected weather-dependent curve: ▪ [1.8] Main zone – Heating (☀) ▪ [1.9] Main zone – Cooling (❄) ▪ [2.8] Additional zone – Heating (☀) ▪ [2.9] Additional zone – Cooling (❄)
b, c	Setpoint 1 and setpoint 2. You can change them: ▪ By dragging the setpoint. ▪ By tapping the setpoint, and then using the – / + buttons in **d, e**.
d, e	Values of the selected setpoint. You can change the values using the – / + buttons.
f	**Restriction:** Only shown if an increase was already selected via [1.26] for main zone, or [2.20] for additional zone. `Increase around 0°C` (same as setting [1.26] for main zone, and [2.20] for additional zone). Use this setting to compensate for possible heat losses of the building due to the evaporation of melted ice or snow. (e.g. in cold region countries). In heating operation, the desired leaving water temperature is locally increased around an outdoor temperature of 0°C. 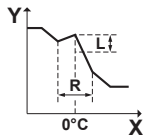 **L**: Increase; **R**: Span; **X**: Outdoor temperature; **Y**: Leaving water temperature Possible values: ▪ No ▪ `increase 2°C, span 4°C` ▪ `increase 2°C, span 8°C` ▪ `increase 4°C, span 4°C` ▪ `increase 4°C, span 8°C`
X-axis	Outdoor temperature.

Item	Description
Y-axis	Leaving water temperature for the selected zone. The icon corresponds to the heat emitter for that zone: ▪ : Underfloor heating ▪ : Heat pump convector ▪ : Radiator

To fine-tune a weather-dependent curve

The following table describes how to fine-tune the weather-dependent curve of a zone:

You feel...		Fine-tune with setpoints:			
At regular outdoor temperatures ...	At cold outdoor temperatures ...	Setpoint 1 (b)		Setpoint 2 (c)	
		X	Y	X	Y
OK	Cold	↑	↑	—	—
OK	Hot	↓	↓	—	—
Cold	OK	—	—	↑	↑
Cold	Cold	↑	↑	↑	↑
Cold	Hot	↓	↓	↑	↑
Hot	OK	—	—	↓	↓
Hot	Cold	↑	↑	↓	↓
Hot	Hot	↓	↓	↓	↓

10.3 Menu structure: Overview installer settings

NOTICE

When changing a setting, the operation is temporarily stopped. Operations will restart when you return to the home screen.

Depending on your unit type and the selected settings, some settings will not be visible.

[1] Main zone

- [1.6] `Setpoint range`
- [1.12] `Control`
- [1.13] `External room thermostat`
- [1.14] `Delta T heating`
- [1.16] `Cooling allowance`
- [1.18] `Delta T cooling`
- [1.19] `Overheating water circuit`
- [1.20] `Undercooling water circuit`
- [1.26] `Increase around 0°C`
- [1.31] `Daikin room thermostat`

[2] Additional zone

- [2.6] `Setpoint range`
- [2.12] `Control`
- [2.13] `External room thermostat`
- [2.14] `Delta T heating`
- [2.17] `Delta T cooling`

- [2.20] Increase around 0°C
- [2.33] Cooling allowance

[3] Heating/cooling

- [3.6] Additional zone
- [3.7] Max. heating overshoot LWT
- [3.8] Averaging time
- [3.9] Max. cooling undershoot LWT
- [3.11] Undercooling setpoint
- [3.12] Overheating setpoint
- [3.13] Bizone kit
- [3.14] Room thermostat present
- [3.15] Heatpump minimum on time

[4] Domestic hot water

- [4.10] Disinfection
- [4.11] Operation range
- [4.13] DHW pump
- [4.18] Disinfection enable
- [4.20] Add. source delay timer

[5] Settings

- [5.1] Forced defrost
- [5.2] Quiet operation
- [5.5] Backup heater
- [5.7] Overview field settings
- [5.11] Reset fan operation hours
- [5.14] Bivalent settings
- [5.18] System restart
- [5.19] Diverter valve Type
- [5.22] External ambient sensor offset
- [5.28] Balancing
- [5.29] Refrigerant recovery mode
- [5.36] Water pipe freeze prevention
- [5.37] Bivalent present

[7] Maintenance mode

- [7.1] Actuator test run
- [7.2] Air purge
- [7.3] Operation test run
- [7.4] UFH screed dryout
- [7.7] Operation test run settings
- [7.8] Malfunctioning

[8] Connectivity

- [8.6] Safe removal USB drive
- [8.11] Cloud connection type

[9] Energy

- [9.11] Boiler efficiency
- [9.12] PE factor
- [9.14] Demand response
- [9.15] System limitations

[10] Configuration wizard

See "10.1 Configuration wizard" [▶ 143].

[11] Malfunctioning

[13] Field IO

See "9.1.6 Field IO connections" [▶ 109].

11 Commissioning

NOTICE

Commissioning checklists. Make sure to complete the different commissioning checklists:

- In the installation manuals (outdoor unit and indoor unit) or in the installer reference guide
- In the Daikin e-Care app

NOTICE

First operation. The first time the unit starts in heating or domestic hot water operation, the unit will shortly start up in cooling operation to guarantee the reliability of the heat pump:

- For this reason, the backup heater will increase the water temperature so that the unit does not freeze up. Depending on the water volume of the system, this can take up to a few hours. It is required to start the first time in space heating or space cooling operation (not domestic hot water operation) to limit the backup heater consumption. If you would run in domestic hot water operation for the first time, the backup heater consumption would be expected to be larger.
- Error 89-10 can occur if the unit is installed during days with large temperature variations. To reduce the risk of error 89-10 occurring, it is beneficial to wait a few hours after unlocking the unit and opening the stop valve of the outdoor unit's refrigerant vessel, and before the first start-up of the unit. If error 89-10 still occurs, the unit will shortly stop operation and then resume. The unit will continue operation, but it will take more time until the unit switches from cooling to heating.

NOTICE

If the outdoor temperature is below 18°C, error 89-10 may occur when starting in cooling mode. Change the operating mode to heating, and repeat the process

WARNING

After commissioning, do NOT turn OFF the circuit breakers (**c**) to the units so that the protection remains activated. In case of normal kWh rate power supply (**a**), there is one circuit breaker. In case of preferential kWh rate power supply (**b**), there are two.

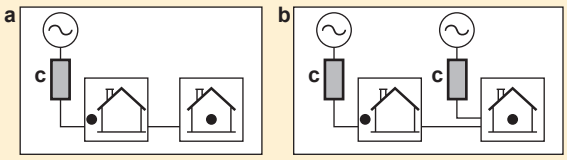

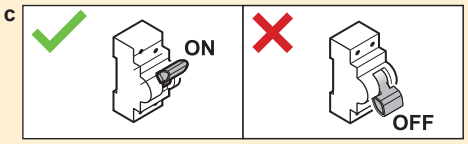

NOTICE

Anti-blockage safety routine – Pumps and valves:

The following pumps and valves are equipped with an anti-blockage safety routine. This means that when the component is inactive (in case of pumps), closed (in case of shut-off valves) or at standstill (in case of bizone kit mixing valve) for 24 h, then the component will operate for a short period of time to ensure it does not get stuck.

- `Unit pump`
- `C/H secondary pump`
- `C/H pump ext. main`
- `C/H pump ext. add.`
- `Main zone shut-off valve`
- `Add. zone shut-off valve`
- `Bizone kit mixing valve`
- `Bizone kit direct pump`
- `Bizone kit mixed pump`

Note:

- To enable these anti-blockage safety routines, the unit must be connected to the power supply all year round.
- During maintenance mode the anti-blockage safety routine does not run.
- When an anti-blockage safety routine is initiated for one component (pump or shut-off valve) in a specific zone, the other component in that zone, if installed, will also be deblocked. **Example:** If the pump of the main zone is being deblocked, the shut-off valve of that zone will also be deblocked.

NOTICE

If automatic air purge valves are installed in the field piping:

- Between the outdoor unit and the indoor unit (on the entering water pipe of the indoor unit), they must be closed after commissioning.
- After the indoor unit (on the emitter side), they may remain open after commissioning.

NOTICE

For houses with a similar heat load as the declared heating capacity on the energy label, it is recommended to set the [5.6.2] `Capacity shortage setting` to 2 (`Below equilibrium`) and decrease the equilibrium setpoint [5.6.2] `Equilibrium setpoint` to the declared bivalent temperature of -10°C. (refer to product fiche in accessory bag or the online energy label database (see: https://daikintechnicaldatahub.eu/)).

NOTICE

To avoid ON/OFF behaviour of the unit it is recommended to not oversize the unit. Refer to the declared heating capacity on the energy label or the online energy label database: https://daikintechnicaldatahub.eu/.

INFORMATION

When the unit is powered ON, it will take 5 minutes for the unit to initialize. During this time the shut-off valve inlet leak stop remains closed so domestic hot water operation cannot start.

INFORMATION

Protective functions – "Maintenance mode". The software is equipped with protective functions. The unit automatically runs these functions when necessary.

Protective functions: [3.4] `Antifrost`, [5.36] `Water pipe freeze prevention` and [4.18] `Disinfection enable`.

During installation or service this behaviour is undesired. Therefore:

- **At first power-on:** The maintenance mode is active, and the protective functions are disabled by default. After 12 hours, the maintenance mode will be deactivated, and the protective functions will be enabled automatically.
- **Afterwards:** Whenever you go to [7] `Maintenance mode` the protective functions are disabled for 12 hours or until you exit `Maintenance mode`.

NOTICE

Maintenance mode. During maintenance mode the following operations are ignored / NOT ignored:

- NOT ignored: [9.15.4] `Outdoor unit fuse limit`.

- Ignored:

- [9.15.1] `Legal limit`
- [9.15.3] `System limit`
- [9.14.1] = `Smart Grid ready contacts` (or via Modbus / Cloud) (Smart Grid operation modes: `Forced off` / `Forced on` / `Recommended on`)
- [9.14.1] = `Smart Meter Contact` (or via Modbus / Cloud) (imposed power limit)
- [5.2] `Quiet operation`

INFORMATION

When in "Maintenance mode", and a malfunction has occurred, one or more icons will appear in the upper left corner of the screen. The function will not start.

- ⚠: an error occurred.
- 🔔: a warning occurred.
- ⊳⊲: the safety valve is closed.

⇨ After clearing the malfunction status, the function can be started manually by pressing the start button.

In this chapter

11.1 Overview: Commissioning 158
11.2 Precautions when commissioning 159
11.3 Checklist before commissioning 159
11.4 Checklist during commissioning 160
11.4.1 To unlock the outdoor unit (compressor) 161
11.4.2 To open the stop valve of the outdoor unit's refrigerant vessel 164
11.4.3 To update the user interface software 167
11.4.4 To check the minimum flow rate 168
11.4.5 To perform an air purge 168
11.4.6 To perform an operation test run 170
11.4.7 To perform an actuator test run 172
11.4.8 To perform an underfloor heating screed dryout 175

11.1 Overview: Commissioning

Typical workflow

Commissioning typically consists of the following stages:

11.2 Precautions when commissioning

NOTICE

ALWAYS operate the unit with thermistors and/or pressure sensors/switches. If NOT, burning of the compressor might be the result.

11.3 Checklist before commissioning

1. After the installation of the unit, check the items listed below.
2. Close the unit.
3. Remove the protective cardboard from the heat exchanger.
4. Power up the unit.

NOTICE

To prevent the pump from running in dry conditions, only power ON the unit when there is water in the unit.

Indoor unit

☐	You read the complete installation instructions, as described in the **installer reference guide**.
☐	The **indoor unit** is properly mounted.
☐	The following **field wiring** has been carried out according to this document and the applicable legislation: ▪ Between the local supply panel and the outdoor unit ▪ Between indoor unit and outdoor unit ▪ Between the local supply panel and the indoor unit ▪ Between the indoor unit and the valves (if applicable) ▪ Between the indoor unit and the room thermostat (if applicable)
☐	The **normally closed shut-off valve** (inlet leak stop) is properly installed.
☐	The system is properly **earthed** and the earth terminals are tightened.
☐	The **fuses**, **circuit breakers**, or **locally installed protection devices** are of the size and type specified in this document, and have NOT been bypassed.
☐	The **power supply voltage** matches the voltage on the identification label of the unit.
☐	There are NO **loose connections** or damaged electrical components in the switch box.
☐	There are NO **damaged components** or **squeezed pipes** on the inside of the indoor and outdoor units.
☐	**Backup heater circuit breaker** F1B (field supply) is turned ON.
☐	The correct pipe size is installed and the **pipes** are properly insulated.
☐	There is NO **water leak** inside the indoor unit.
☐	The **shut-off valves** are properly installed and fully open.
☐	If **automatic air purge valves** are installed in the field piping: ▪ Between the outdoor unit and the indoor unit (on the entering water pipe of the indoor unit), they must be closed after commissioning. ▪ After the indoor unit (on the emitter side), they may remain open after commissioning.

☐	The following **field piping** on the cold water inlet of the DHW tank has been carried out according to this document and the applicable legislation: ▪ Non-return valve ▪ Pressure reducing valve ▪ Pressure relief valve (and it purges clean water when opened) ▪ Tundish ▪ Expansion vessel
☐	The **domestic hot water tank kit** has been installed on the cold water inlet of the DHW tank. The **pressure relief valve** (DHW circuit) purges water when opened. Clean water MUST come out.
☐	The **pressure relief valve** (space heating circuit) purges water when opened. Clean water MUST come out.
☐	The **minimum water volume** is guaranteed in all conditions. See "To check the water volume and flow rate" in "8.1 Preparing water piping" [▶ 87].
☐	The **domestic hot water tank** is filled completely.
☐	The **water quality** complies with EU directive 2020/2184.
☐	**No anti-freeze solution** (e.g. glycol) is added to the water.
☐	The "**No glycol" tag** (delivered as accessory) is attached to the field piping near the filling point.
☐	You explained to the user how to safely use the R290 heat pump. For more information about this, see the dedicated Service Manual ESIE22-02 "Systems using R290 refrigerant" (available on https://my.daikin.eu).

Outdoor unit

☐	Before starting work, you checked the safety items in "3.1 Safety checklist before work on R290 units" [▶ 22].
☐	The outdoor unit is properly mounted. See "7.3 Mounting the outdoor unit" [▶ 80].
☐	The outdoor unit's transportation bolt (+ washer) is removed. See "7.2.3 To remove the transportation bolt (+ washer)" [▶ 76].
☐	The outdoor unit is installed in a suitable location. See "7.1.1 Installation site requirements of the outdoor unit" [▶ 71].
☐	The "protective zone" around the outdoor unit is respected. See "7.1.1 Installation site requirements of the outdoor unit" [▶ 71].
☐	The shut-off valve is connected to the outdoor unit water inlet. See "8.2.3 To connect the water piping" [▶ 94].
☐	A correct field fuse and earth leakage circuit breaker are installed on the outdoor unit's power supply. The fuses, circuit breakers, or locally installed protection devices are of the size and type specified in "9.2.1 Specifications of standard wiring components" [▶ 113], and have NOT been bypassed.
☐	The "Do NOT turn OFF the circuit breaker" stickers are fixed in the electrical cabinet. See "9.2.3 To fix the "Do NOT turn OFF the circuit breaker" stickers" [▶ 116].

11.4 Checklist during commissioning

☐	To unlock the **outdoor unit** (compressor).
☐	To open the **stop valve of the outdoor unit's refrigerant vessel**.
☐	To update the **user interface software** to the latest version.

☐	To check that the **minimum flow rate** during cooling / heating start-up / defrost / backup heater operation is guaranteed in all conditions. See "To check the water volume and flow rate" in "8.1 Preparing water piping" [▶ 87].
☐	To perform an **air purge**.
☐	To perform an **actuator test run**.
☐	To perform a **test run**.
☐	To perform (start) an **underfloor screed dryout** (if necessary).

11.4.1 To unlock the outdoor unit (compressor)

NOTICE

During the locked state, the heat pump is NOT allowed to operate.

Limited operation / commissioning is possible via the electrical heaters linked to [5.23] `Emergency selection` (see " [10.7] `System` 4/4" [▶ 146]).

Who	Only trained installers with the required level of competences are authorised to perform the unlocking procedure (i.e. generate the Digital Key).
What	The compressor of Daikin Altherma 4 heat pumps is shipped in a locked state. During commissioning, it must be unlocked via the Digital Key function on the Daikin e-Care app and on the user interface of the indoor unit. 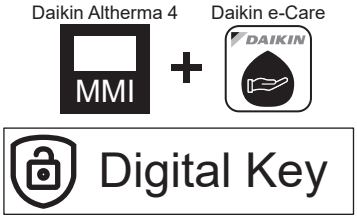 **Note:** To clear certain R290-related errors (e.g. R290 refrigerant leakage, gas sensor errors), you also need to use the Digital Key function.
When	**Option 1 (configuration wizard):** At first power ON of the unit the configuration wizard starts automatically. After you completed all steps in the wizard (see "10.1 `Configuration wizard`" [▶ 143]), the user interface will show an error message instructing to start the Digital Key function (i.e. perform the unlocking procedure). **Option 2 (errors):** When there are errors that need the Digital Key to clear, you can start the Digital Key function from the respective error messages.

Required	▪ Smartphone (iOS/Android supported) with the Daikin e-Care app installed. - To download the app, see "1 About this document" [▶ 6]. - Offline functionality to generate the Digital Key is supported (if the user was already logged in). ▪ Stand By Me professional account (to log in to the app), with the required level of training to handle R290 units.
Attention points	▪ Maximum 5 unlock attempts per 15 minutes are allowed. If exceeded, the unit does NOT allow any other attempts for 1 hour. ▪ Once the Digital Key is entered, permissions on the unit are increased for 6 hours. It is recommended for the installer to revert to user mode when leaving the site.

Unlocking procedure (flowchart)

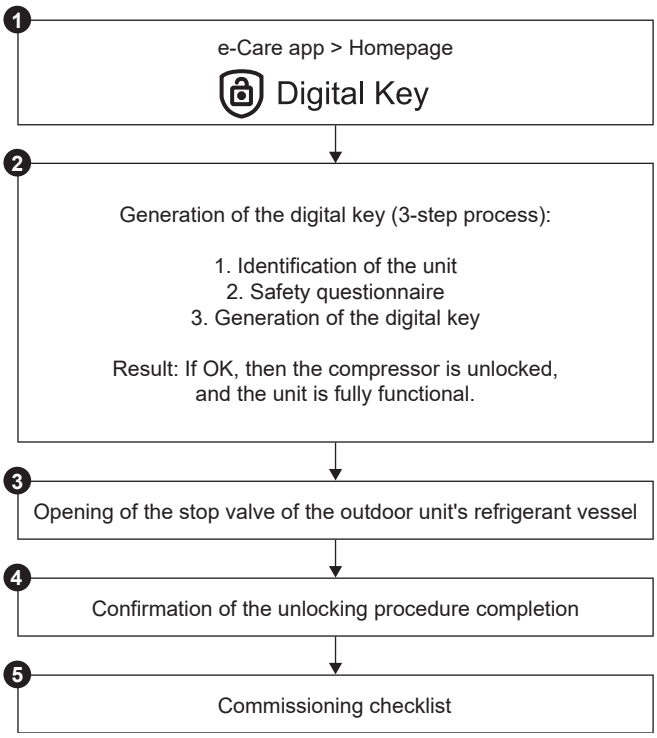

Unlocking procedure (detailed steps)

❶		On the homepage of the Daikin e-Care app, go to: 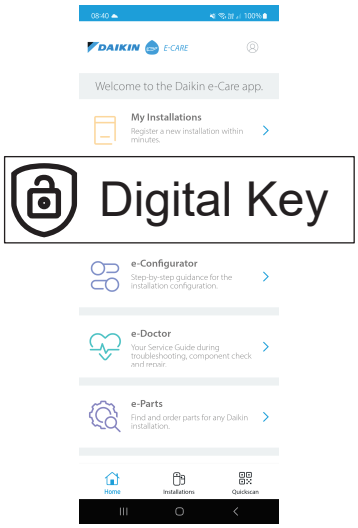 **Result:** The app verifies if the installer has the required level of competences to perform the unlocking procedure. If not, an error is shown and actions are restricted.
❷		The 3-step process to generate the Digital Key starts: ▪ 2.1 Identification of the unit ▪ 2.2 Safety questionnaire ▪ 2.3 Generation of the Digital Key
2.1		**Identification of the unit** Scan the QR code on the name plate of the indoor unit. The app will check if this unit is already registered and found by Stand By Me. For new installations, you will need to register the unit before you can go to the next step.
2.2		**Safety questionnaire** Answer safety questions. This short list of questions helps the installer verifying that the minimum safety requirements to activate the compressor are met. When the checklist is completed, the app checks the answers, and generates a report. Only if all the safety requirements are met, you can go to the next step.
2.3		**Generation of the Digital Key**
	2.3.1 MMI	The app shows a first code. Enter this code in the user interface. For example: 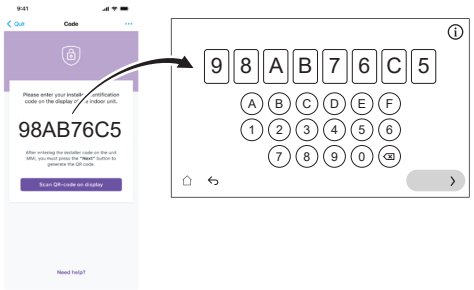

	2.3.2	The user interface generates a QR code. Scan this code with the app. For example:
	2.3.3	The app shows a second code (= Digital Key; one-time code). Enter this code in the user interface. For example: 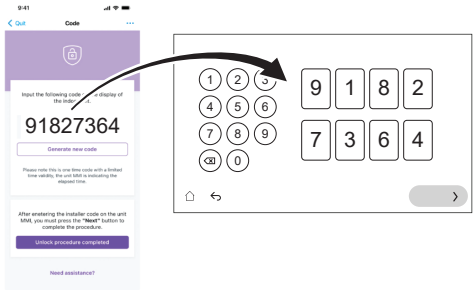
	Result:	If everything is OK, then: ▪ The user interface shows a confirmation. ▪ The compressor is unlocked and the unit is fully functional.
❸		When instructed by the user interface, open the stop valve of the outdoor unit's refrigerant vessel. See "11.4.2 To open the stop valve of the outdoor unit's refrigerant vessel" [▸ 164].
❹		On the app, confirm the completion of the unlocking procedure.
❺		On the app, you will be directed to the commissioning tool where you can fill in the commissioning checklist to complete the detailed checks on the installation. When the commissioning process is completed, the unit is ready to operate.

11.4.2 To open the stop valve of the outdoor unit's refrigerant vessel

NOTICE

After installation, the stop valve must remain fully open to prevent damage to the seal.

NOTICE

When opening the stop valve of the outdoor unit's refrigerant vessel, use appropriate tools to prevent damage to the stop valve.

For safe transportation, almost all refrigerant is stored in the refrigerant vessel of the outdoor unit. During commissioning, when performing the unlocking procedure of the outdoor unit (see "11.4.1 To unlock the outdoor unit (compressor)" [▸ 161]), the stop valve of the refrigerant vessel must be fully opened (when instructed by the user interface) and remain fully open.

1. Make sure there is no gas leak on the circuit between the indoor unit and the outdoor unit by using a gas leak detector.
2. Remove the cap.

3 Turn the stop valve fully open (turn as shown until it cannot be turned any further) and leave it fully open.

4 Reattach the cap to prevent leakage.

5 Recheck to make sure there is no gas leak.

In case of EPSKS04~07A*:

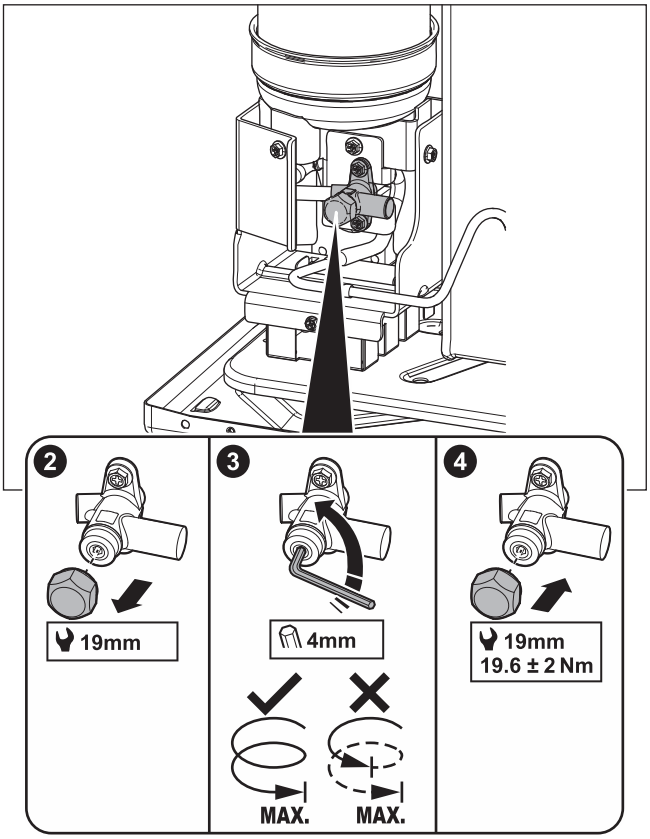

In case of EPSK06~14A*:

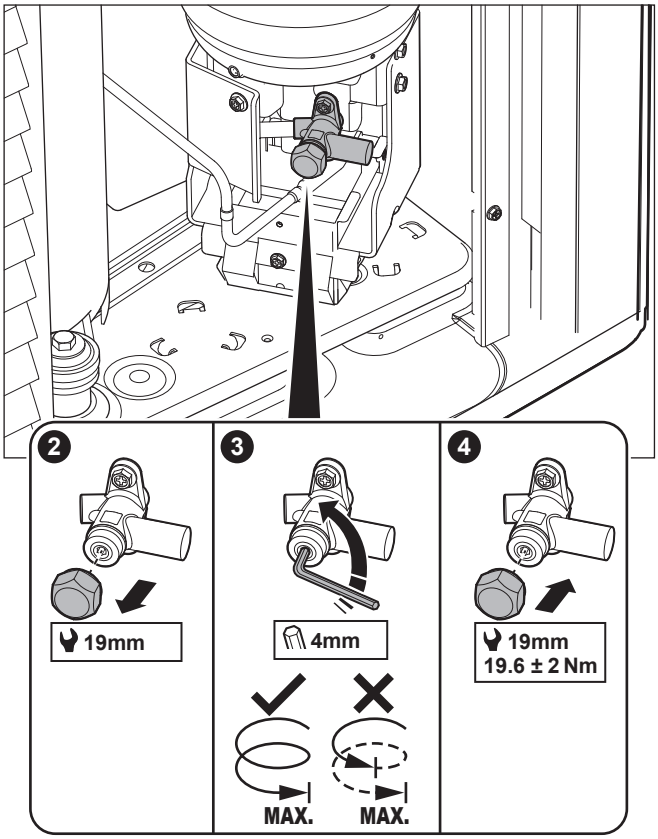

Sticker – In case of EPSKS04~07A*:

The sticker on the service cover of the outdoor unit contains info about opening the stop valve of the outdoor unit's refrigerant vessel. Some text is in English. This is the translation:

#	English	Translation
10	Unlock the unit before opening the valve.	Unlock the unit before opening the valve.
10a	Unlock via the MMI and e-Care app. The MMI will instruct when to open the valve.	Unlock via the MMI (user interface of indoor unit) and e-Care app. The MMI will instruct when to open the valve.
10c	Turn fully open and leave fully open.	Turn fully open and leave fully open.

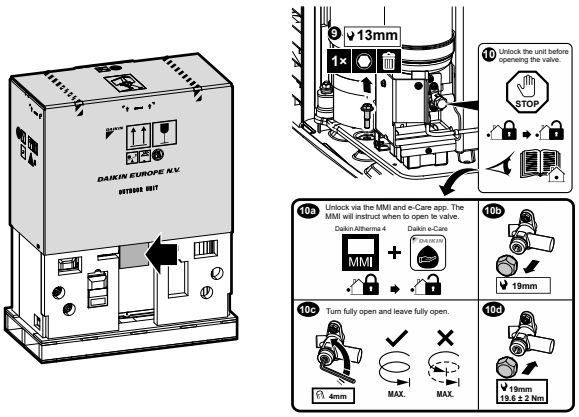

Sticker – In case of EPSK06~14A*:

The sticker on the service cover of the outdoor unit contains info about opening the stop valve of the outdoor unit's refrigerant vessel. Some text is in English. This is the translation:

#	English	Translation
4	Unlock the unit before opening the valve.	Unlock the unit before opening the valve.
4a	Unlock via the MMI and e-Care app. The MMI will instruct when to open the valve.	Unlock via the MMI (user interface of indoor unit) and e-Care app. The MMI will instruct when to open the valve.
4c	Turn fully open and leave fully open.	Turn fully open and leave fully open.

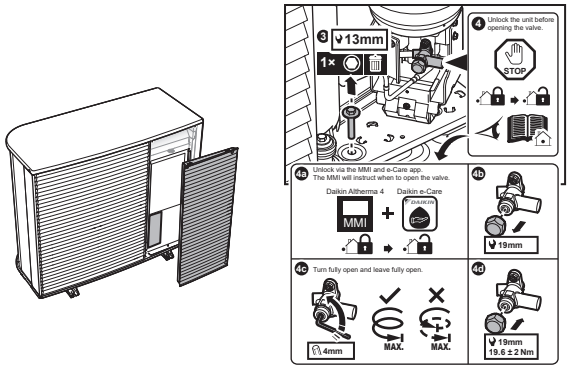

11.4.3 To update the user interface software

During commissioning, it is good practice to update the user interface software so that you have all latest functionality available.

1. Download the latest user interface software (available on https://my.daikin.eu; search via the Software Finder).
2. Put the software on a USB-stick (must be formatted as FAT32).
3. Power OFF the unit.
4. Insert the USB-stick in the USB-port located on the interface PCB (A11P).
5. Power ON the unit. Do NOT power ON the unit if the switch box is open.

   Result: The software is automatically updated. You can follow its process on the user interface.

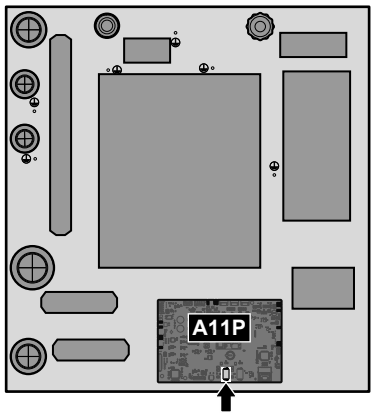

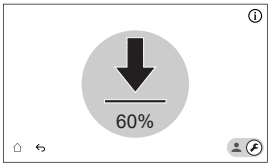

6. Power OFF the unit.
7. Unplug the USB stick from the USB-port located on the interface PCB (A11P).

8 Power ON the unit. Do NOT power ON the unit if the switch box is open.

11.4.4 To check the minimum flow rate

1	Check the hydraulic configuration to find out which space heating loops can be closed by mechanical, electronic, or other valves.
2	Close all space heating loops that can be closed.
3	Start the pump test run (see "11.4.7 To perform an actuator test run" [▶ 172]). ▪ Choose [7.1.4] `Unit pump` ▪ Choose pump speed: `High`
4	Read out the flow rate[(a)] and modify the bypass valve setting to reach the minimum required flow rate + 2 l/min.

[(a)] During pump test run, the unit can operate below the minimum required flow rate.

If operation is...	Then the minimum flow rate is...
Cooling / heating start-up / defrost / backup heater operation	Required: ▪ For EPVX07: 20 l/min ▪ For EPVX10: 22 l/min ▪ For EPVX14: 24 l/min
Domestic hot water production	Recommended: ▪ For EPVX07: 20 l/min ▪ For EPVX10: 25 l/min ▪ For EPVX14: 25 l/min

11.4.5 To perform an air purge

NOTICE

Second air purge. If you need to perform an air purge a second time (after 30 minutes), you must leave the maintenance mode and then enter it again.

NOTICE

The main and additional pump are not switched ON during an air purge. Therefore, the air purge for the mixing kit needs to be activated via normal operation.

The pumps are switched ON:

- by activating the external thermostat for the dedicated zone, which will activate the pump for that zone, or
- in the LWT control both pumps will be ON when the space heating/cooling operation is switched on on the home screen.

1	Switch to installer mode. 5678

2 Go to [7] `Maintenance mode` and `Confirm`.

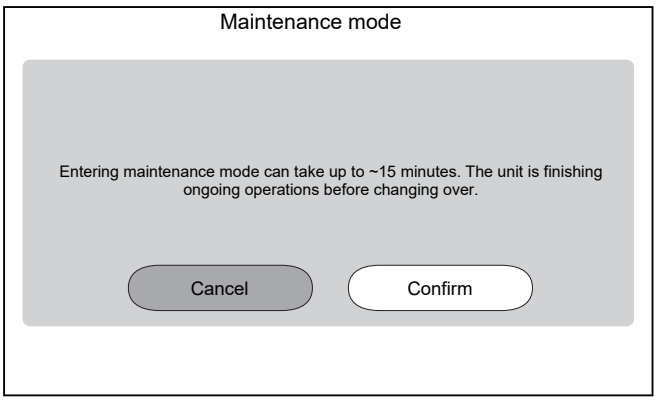

Result: Operation of `Heating/cooling` and `Domestic hot water` will be automatically turned off.

Remark: If the unit is still in entering maintenance mode after 15 minutes, perform a power reset.

3 Go to [7.7] `Maintenance mode` > `Operation test run settings`, and define the pump PWM targets that you want to use during the test run.

- For air purge test run: You can choose between `Low speed` and `High speed`.

✿[094]	[7.7.8] `Pump limitation maintenance mode` (`Low speed`)	Pump PWM target (`Low speed`). Only used during actuator test run (only for unit pump test run) and air purge test run. 0.1~1 step: 0.1
✿[095]	[7.7.8] `Pump limitation maintenance mode` (`High speed`)	Pump PWM target (`High speed`). Only used during actuator test run and air purge test run. 0.1~1 step: 0.1

4 Go to [7.2] `Maintenance mode` > `Air purge`.

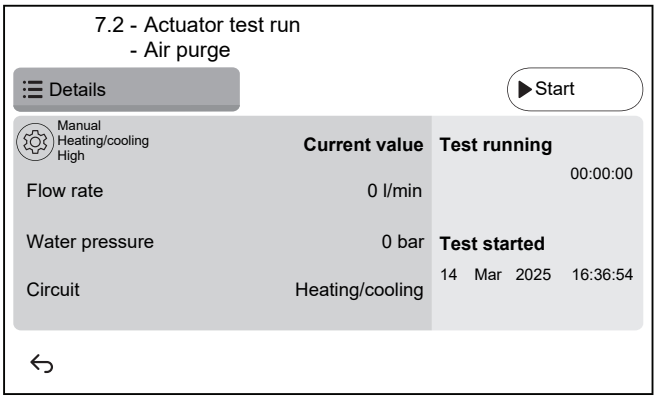

4.1	⚙ Settings: Use the settings to specify which `Air purge` should be performed and confirm. 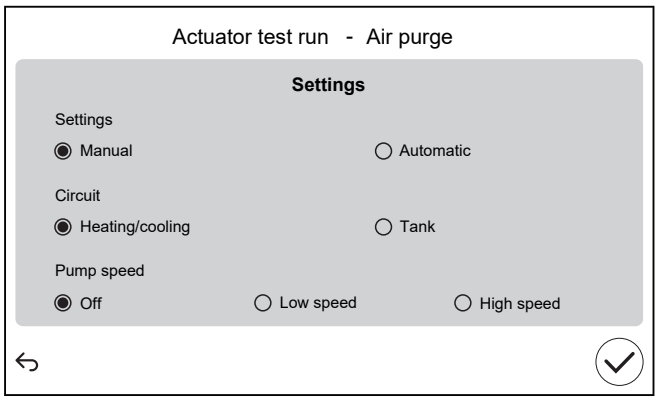

`Settings`		
▪ `Manual`	▪ `Automatic`	
`Circuit`:		
▪ `Heating/cooling`	▪ `Tank`	
`Pump speed`:		
▪ `Off`	▪ `Low speed`	▪ `High speed`

4.2	Tap `Start` to run the air purge. **Result:** The air purge starts. It stops automatically after some time.
4.3	Tap `Stop` to stop the air purge. **Result:** The air purge stops.
5	After the air purge test:
5.1	Choose ↩ to go back in the menu.
5.2	Choose ⌂ to leave the `Maintenance mode`.
6	When leaving `Maintenance mode`, the user interface automatically restores operation (`Heating/cooling` and `Domestic hot water`) as it was before entered `Maintenance mode`. Check if all operation modes are activated as expected.

11.4.6 To perform an operation test run

NOTICE

Before starting an operation test run make sure the minimum flow requirements are guaranteed (See "11.4.4 To check the minimum flow rate" [▸ 168]).

1	Switch to installer mode. 5678

2	Go to [7] `Maintenance mode` and `Confirm`. 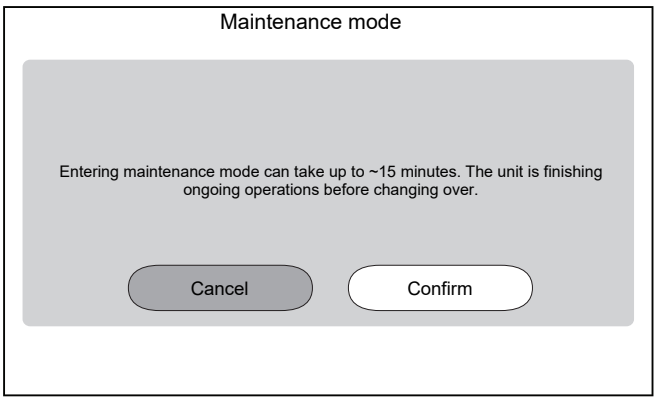 **Result:** Operation of `Heating/cooling` and `Domestic hot water` will be automatically turned off. **Remark:** If the unit is still in entering maintenance mode after 15 minutes, perform a power reset.
3	Go to [7.7] `Maintenance mode` > `Operation test run settings`, and define the target temperatures that you want to use during the operation test run.

✿[030]	[7.7.1] `Space heating delta T target`	Delta T target that will be used during the space heating test run. 2~20°C
✿[031]	[7.7.2] `Space heating leaving water target`	Target leaving water temperature that will be used during the space heating test run. 5~71°C
✿[032]	[7.7.3] `Space heating room`	Target room temperature that will be used during the space heating test run. 5~30°C
✿[033]	[7.7.4] `Space cooling delta T target`	Delta T target that will be used during the space cooling test run. 2~10°C
✿[034]	[7.7.5] `Space cooling leaving water target`	Target leaving water temperature that will be used during the space cooling test run. 5~30°C
✿[035]	[7.7.6] `Space cooling room`	Target room temperature that will be used during the space cooling test run. 5~30°C
✿[077]	[7.7.7] `Tank setpoint`[(a)]	Target tank temperature that will be used during the tank heat-up test run. 20~85°C

✿[145]	[7.7.9] `Tank target BSH test run`[b]	Target tank temperature that will be used during the booster heater test run. 25~60°C

4	Go to [7.3] `Maintenance mode` > `Operation test run`
5	Select an operation to test. **Example:** [7.3.1] `Space heating`. 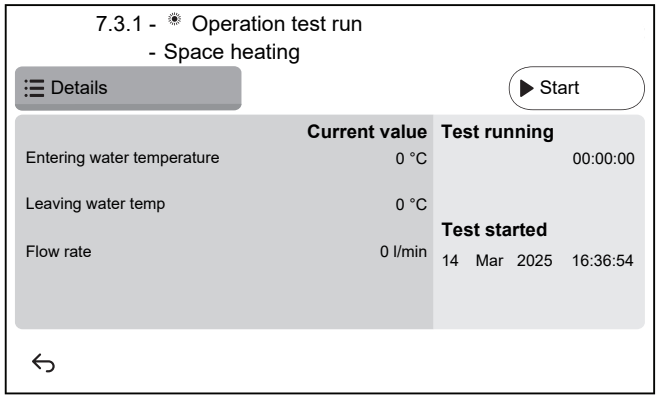
5.1	Tap `Start` to run the operation test. **Result:** The operation test starts.
5.2	Tap `Stop` to stop the operation test. **Note:** Even if the test run has been stopped, it can continue up to its minimum operation time set in [3.15] `Heatpump minimum on time`.
6	After the operation test run:
6.1	Choose ↩ to go back in the menu.
6.2	Choose ⌂ to leave the `Maintenance mode`.
7	When leaving `Maintenance mode`, the user interface automatically restores operation (`Heating/cooling` and `Domestic hot water`) as it was before entered `Maintenance mode`. Check if all operation modes are activated as expected.

[a] If a tank is not connected, this setting will still appear for wall-mounted units but it will NOT be effective.

[b] Only applicable for wall-mounted units. If a tank is not connected, this setting will NOT appear.

11.4.7 To perform an actuator test run

1	Switch to installer mode. 5678

2 Go to [7] `Maintenance mode` and `Confirm`.

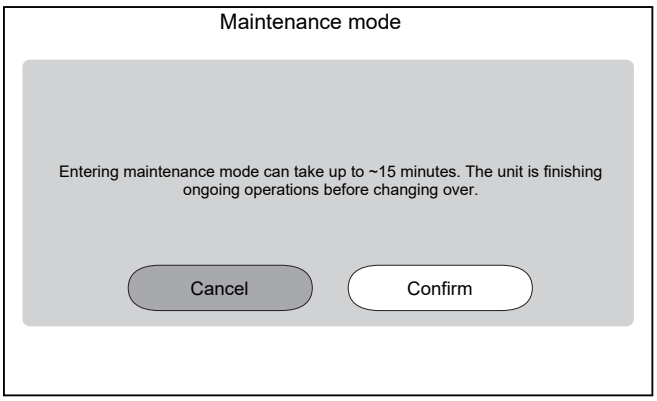

Result: Operation of `Heating/cooling` and `Domestic hot water` will be automatically turned off.

Remark: If the unit is still in entering maintenance mode after 15 minutes, perform a power reset.

3 Go to [7.7] `Maintenance mode` > `Operation test run settings`, and define the pump PWM targets that you want to use during the test run.

- For unit pump test run: You can choose between `Low speed` and `High speed`.
- For other actuator test runs: `High speed` is used.

✿[094]	[7.7.8] `Pump limitation maintenance mode` (`Low speed`)	Pump PWM target (`Low speed`). Only used during actuator test run (only for unit pump test run) and air purge test run. 0.1~1 step: 0.1
✿[095]	[7.7.8] `Pump limitation maintenance mode` (`High speed`)	Pump PWM target (`High speed`). Only used during actuator test run and air purge test run. 0.1~1 step: 0.1

4 Go to [7.1] `Maintenance mode` > `Actuator test run`.

5 Select an actuator to test. **Example:** [7.1.4] `Unit pump`

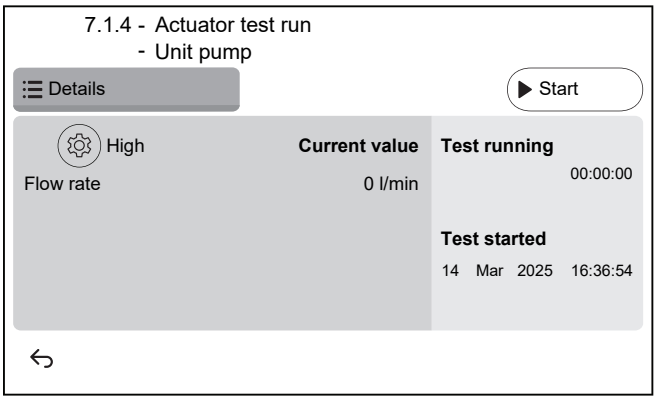

5.1 ⚙

Settings: For certain actuators, you can define some settings before the test.

5.2	Tap `Start` to run the test. **Result:** ▪ Values for actuator shown in the detail section. ▪ Time measurement starts.
5.3	Tap `Stop` to stop the test. **Note:** Due to a required after run time, the test run can continue for a certain time even when it has been stopped.
6	After the actuator test:
6.1	Choose ↩ to go back in the menu.
6.2	Choose ⌂ to leave the `Maintenance mode`.
7	When leaving `Maintenance mode`, the user interface automatically restores operation (`Heating/cooling` and `Domestic hot water`) as it was before entered `Maintenance mode`. Check if all operation modes are activated as expected.

Possible actuator test runs

Depending on your unit type and selected settings, some tests will not be visible.

> **INFORMATION°**
> During the actuator tests for `Booster heater`, `Bivalent` and `Tank boiler` the setpoint is not respected. The component will be stopped when reaching its internal limits. If these limits are reached the actuator test will continue and activate that component again when the limitations allow its operation.

- [7.1.2] `Bivalent` test
- [7.1.3] `Tank boiler` test
- [7.1.4] `Unit pump` test

> **INFORMATION**
> Make sure that all air is purged before executing the test run. Also avoid disturbances in the water circuit during the test run.

- [7.1.5] `Diverter valve` test (3-way valve for switching between space heating and tank heating)
- [7.1.6] `Backup heater` test
- [7.1.7] `Tank valve` test
- [7.1.8] `Bypass valve` test

Bizone mixing kit actuator tests

> **INFORMATION**
> This functionality is NOT available in early versions of the user interface software.

- [7.1.9] `Bizone kit mixing valve` test
- [7.1.10] `Bizone kit direct pump` test
- [7.1.11] `Bizone kit mixed pump` test

To execute an actuator test on the Bizone mixing kit go to home screen and turn on operation of `Heating/cooling` and adapt the setpoint of the main zone. Then visual check if the pumps are working and the mixing valve are turning.

11.4.8 To perform an underfloor heating screed dryout

NOTICE

The installer is responsible for:

- contacting the screed manufacturer for the maximum allowed water temperature, to avoid cracking the screed,
- programming the underfloor heating screed dryout schedule according to the initial heating instructions of the screed manufacturer,
- checking the proper functioning of the setup on a regular basis,
- performing the correct program complying with the type of the used screed.

NOTICE

Before starting an underfloor heating screed dryout make sure the minimum flow requirements are guaranteed (See "11.4.4 To check the minimum flow rate" [▸ 168]).

NOTICE

When two zones are selected the underfloor heating screed dryout can only be executed on the main zone.

NOTICE

When there is a power failure, the underfloor heating screed dryout will continue where it was interrupted in the underfloor heating screed dryout program.

INFORMATION

The procedure below indicates that you need to tap `Stop` to stop the function, but the `Stop` button is NOT available in early versions of the user interface software. Instead, use ↩ or ⌂ to stop the function.

1	Switch to installer mode. 5678
2	Go to [7] `Maintenance mode` and `Confirm` . 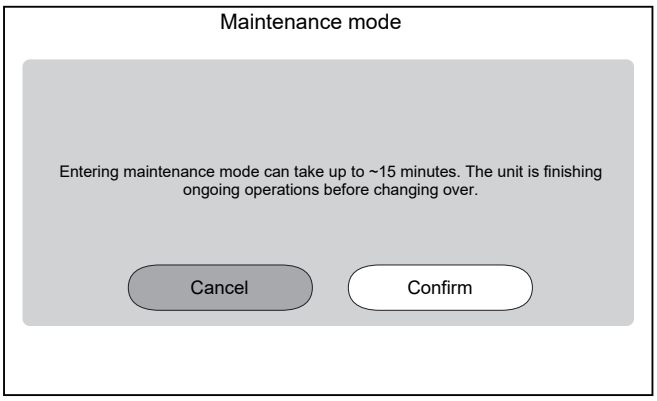 **Result:** Operation of `Heating/cooling` and `Domestic hot water` will be automatically turned off. **Remark:** If the unit is still in entering maintenance mode after 15 minutes, perform a power reset.

3	Go to [7.4] `Maintenance mode` > `UFH screed dryout` 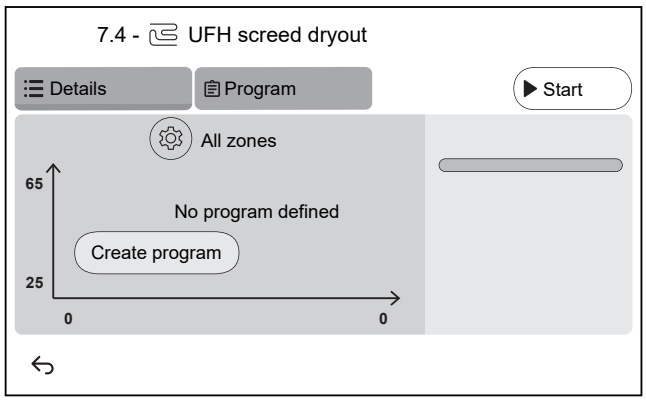
3.1	Tap on `Create program` or tap on `Program` and + to define a program step. A program can consists of multiple program-steps and a maximum of 30 program-steps. 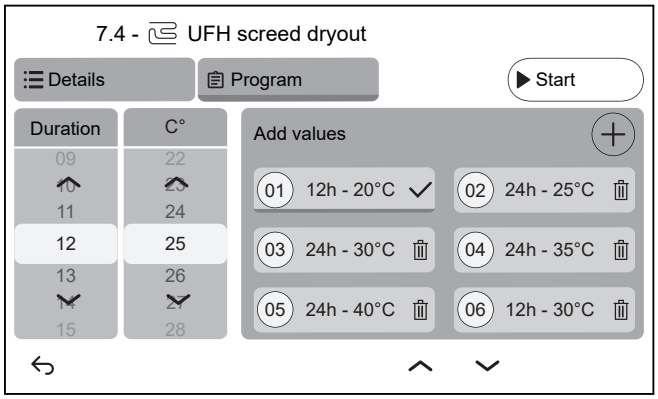 Each program step contains the sequence number, the duration and desired leaving water temperature.
3.2	⚙ Settings: **Note:** This functionality is NOT available in early versions of the user interface software. Underfloor heating screed dryout can only be executed on the main zone.

3.3	Tap `Start` to run the underfloor heating screed dryout. 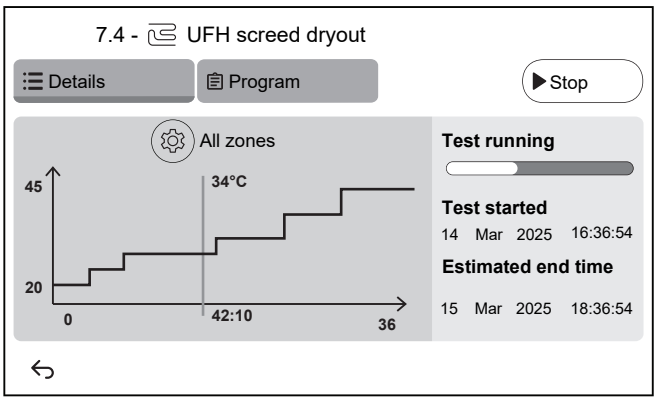 **Result:** ▪ The underfloor heating screed dryout starts. It stops automatically when all steps are done. ▪ A progress bar indicates where the program is currently situated. ▪ The program start time and estimated end time based on the current time and duration of the program are displayed. ▪ The underfloor heating screen is used as home screen until the finish of the program.
3.4	Tap `Stop` to stop the underfloor heating screed dryout.
4	After the underfloor heating screed dryout:
4.1	Choose ⮌ to go back in the menu.
4.2	Choose ⌂ to leave the `Maintenance mode`
5	When leaving `Maintenance mode`, the user interface automatically restores operation (`Heating/cooling` and `Domestic hot water`) as it was before entered `Maintenance mode`. Check if all operation modes are activated as expected.

12 Hand-over to the user

Once the test run is finished and the unit operates properly, make sure the following is clear for the user:

- Fill in the installer setting table (in the operation manual) with the actual settings.
- Make sure that the user has the printed documentation and ask him/her to keep it for future reference. Inform the user that he/she can find the complete documentation at the URL mentioned earlier in this manual.
- Explain to the user how to properly operate the system and what to do in case of problems.
- Show the user what to do for the maintenance of the unit.
- Explain about energy saving tips to the user as described in the operation manual.
- Explain to the user to NOT turn OFF the circuit breakers (**c**) to the units so that the protection remains activated. In case of normal kWh rate power supply (**a**), there is one circuit breaker. In case of preferential kWh rate power supply (**b**), there are two.

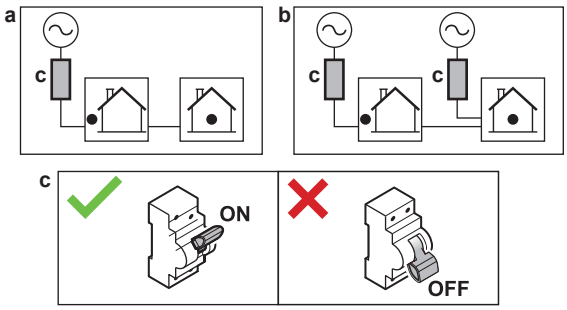

- Explain to the user that when they want to dispose of the unit, that they cannot do it themselves, but that they need to contact a Daikin certified technician.
- Explain to the user how to safely use the R290 heat pump. For more information about this, see the dedicated Service Manual ESIE22-02 "Systems using R290 refrigerant" (available on https://my.daikin.eu).

13 Maintenance and service

NOTICE

General maintenance/inspection checklist. Next to the maintenance instructions in this chapter, a general maintenance/inspection checklist is also available on the Daikin Business Portal (authentication required).

The general maintenance/inspection checklist is complementary to the instructions in this chapter and can be used as a guideline and reporting template during maintenance.

NOTICE

Maintenance MUST be done by an authorised installer or service agent.

We recommend performing maintenance at least once a year. However, applicable legislation might require shorter maintenance intervals.

In this chapter

13.1 Maintenance safety precautions 179
13.2 Yearly maintenance 179
13.2.1 Yearly maintenance outdoor unit: overview 179
13.2.2 Yearly maintenance outdoor unit: instructions 180
13.2.3 Yearly maintenance indoor unit: overview 180
13.2.4 Yearly maintenance indoor unit: instructions 180
13.3 To drain the domestic hot water tank 182
13.4 To inspect the inside of the domestic hot water tank 183
13.5 About cleaning the water filter in case of trouble 184
13.5.1 To remove the water filter 184
13.5.2 To clean the water filter in case of trouble 185
13.5.3 To install the water filter 186

13.1 Maintenance safety precautions

DANGER: RISK OF ELECTROCUTION

DANGER: RISK OF BURNING/SCALDING

NOTICE: Risk of electrostatic discharge

Before performing any maintenance or service work, touch a metal part of the unit in order to eliminate static electricity and to protect the PCB.

13.2 Yearly maintenance

13.2.1 Yearly maintenance outdoor unit: overview

Check the following at least once a year:

- Heat exchanger
- Water filter

13.2.2 Yearly maintenance outdoor unit: instructions

Heat exchanger

The heat exchanger of the outdoor unit can get blocked up due to dust, dirt, leaves, etc. It is recommended to clean the heat exchanger yearly. A blocked heat exchanger can lead to too low pressure or too high pressure leading to worse performance.

Water filter

Close the valve. Clean and rinse the water filter.

> **NOTICE**
> Handle the filter with care. To prevent damage to the mesh of the filter, do NOT use excessive force when you reinsert it.

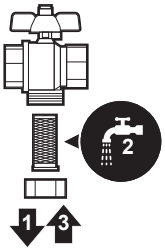

13.2.3 Yearly maintenance indoor unit: overview

- Water pressure
- Magnetic filter/dirt separator
- Water pressure relief valve
- Relief valve hose
- Pressure relief valve of the domestic hot water tank
- Switch box
- Descaling
- Chemical disinfection

13.2.4 Yearly maintenance indoor unit: instructions

Water pressure

Keep water pressure above 1 bar. If it is lower, add water.

Magnetic filter/dirt separator

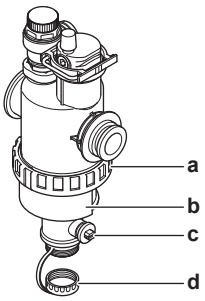

a Screw connection
b Magnetic sleeve
c Drain valve
d Drain cap

The yearly maintenance of the magnetic filter/dirt separator consists of:

- Checking if both parts of the magnetic filter/dirt separator are still screwed tight (a).
- Emptying the dirt separator as follows:

1. Take off the magnetic sleeve (b).
2. Unscrew the drain cap (d).
3. Connect a drain hose to the bottom of the water filter so that the water and dirt can be collected in a suitable container (bottle, sink...).
4. Open the drain valve for a couple of seconds (c).

   Result: Water and dirt will come out.
5. Close the drain valve.
6. Screw the drain cap back on.
7. Reattach the magnetic sleeve.
8. Check the pressure of the water circuit. If required, add water.

NOTICE

- When checking the magnetic filter/dirt separator for tightness, hold it firmly, so as NOT to apply stress to the water piping.
- Do NOT isolate the magnetic filter/dirt separator by closing the shut-off valves. To properly empty the dirt separator, sufficient pressure is required.
- To prevent dirt from remaining in the dirt separator, ALWAYS take off the magnetic sleeve.
- ALWAYS first unscrew the drain cap, and connect a drain hose to the bottom of the water filter, then open the drain valve.

INFORMATION

For yearly maintenance, you do not have to remove the water filter from the unit to clean it. But in case of trouble with the water filter, you might have to remove it so that you can thoroughly clean it. Then you need to do as follows:

- "13.5.1 To remove the water filter" [▸ 184]
- "13.5.2 To clean the water filter in case of trouble" [▸ 185]
- "13.5.3 To install the water filter" [▸ 186]

Water pressure relief valve

Open the valve and check if it operates correctly. **The water may be very hot!**

Checkpoints are:

- The water flow coming from the relief valve is high enough, no blockage of the valve or in between piping is suspected.
- Dirty water coming out of the relief valve:
  - open the valve until the discharged water does NOT contain dirt anymore
  - flush the system

It is recommended to do this maintenance more frequently.

Pressure relief valve hose

Check whether the pressure relief valve hose is positioned appropriately to drain the water. See "7.4.3 To connect the drain hose to the drain" [▸ 85].

Pressure relief valve of the domestic hot water tank (field supply)

Open the valve.

CAUTION

Water coming out of the valve may be very hot.

- Check if nothing blocks the water in the valve or in between piping. The water flow coming from the relief valve must be high enough.
- Check if the water coming out of the relief valve is clean. If it contains debris or dirt:
  - Open the valve until the discharged water does not contain debris or dirt anymore.
  - Flush and clean the complete tank, including the piping between the relief valve and cold water inlet.

To make sure this water originates from the tank, check after a tank heat up cycle.

INFORMATION

It is recommended to perform this maintenance more than once a year.

Switch box

- Carry out a thorough visual inspection of the switch box and look for obvious defects such as loose connections or defective wiring.
- Using an ohmmeter, check if contactor K3M (depending on your installation) operate correctly. The contact of contactor K3M must be in open position when the power is turned OFF.

WARNING

If the internal wiring is damaged, it has to be replaced by the manufacturer, its service agent or similarly qualified persons.

Descaling

Depending on water quality and set temperature, scale can deposit on the heat exchanger inside the domestic hot water tank and can restrict heat transfer. For this reason, descaling of the heat exchanger may be required at certain intervals.

Chemical disinfection

If the applicable legislation requires a chemical disinfection in specific situations, involving the domestic hot water tank, please be aware that the domestic hot water tank is a stainless steel cylinder. We recommend to use a non-chloride based disinfectant approved for use with water intended for human consumption.

NOTICE

When using means for descaling or chemical disinfection, make sure water quality still complies with EU directive 2020/2184.

13.3 To drain the domestic hot water tank

DANGER: RISK OF BURNING/SCALDING

The water in the tank can be very hot.

Prerequisite: Stop the unit operation via the user interface.

Prerequisite: Turn OFF the respective circuit breaker.

Prerequisite: Close the cold water supply.

Prerequisite: Open all the hot water tapping points to allow air to enter the system.

1 Remove the top panel. See "7.2.5 To open the indoor unit" [▶ 78].
2 Remove the user interface panel. See "7.2.5 To open the indoor unit" [▶ 78].
3 Lower the switchbox. See "7.2.5 To open the indoor unit" [▶ 78].
4 Remove the tube from the temperature and pressure relief valve that is located on top of the tank.
5 Remove the temperature and pressure relief valve from the tank.
6 Use a drain hose and a pump to drain the tank via the access point.

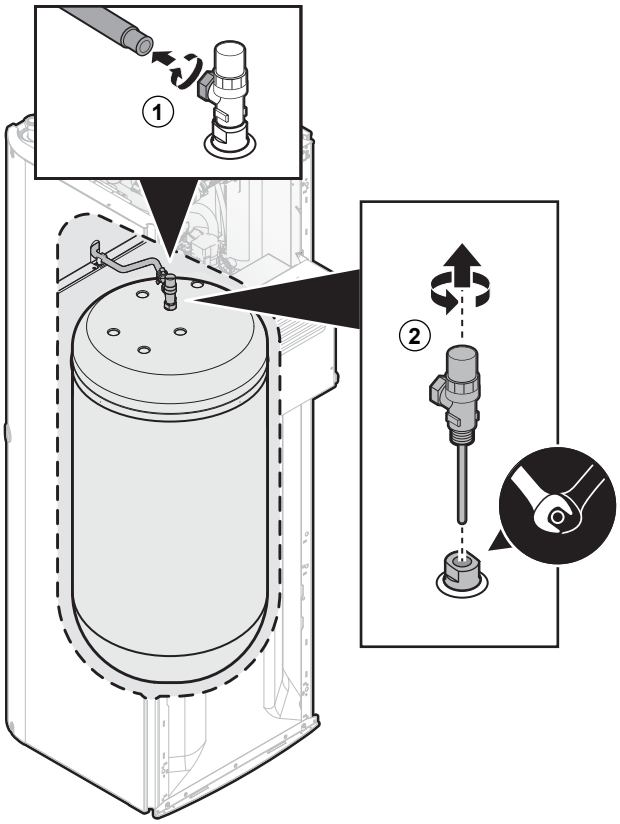

7 Tightening torques for installation:

Item	Tightening torque
Tube connection	30 N•m
Temperature and pressure relief valve	40 N•m

13.4 To inspect the inside of the domestic hot water tank

DANGER: RISK OF BURNING/SCALDING

The water in the tank can be very hot.

Prerequisite: Stop the unit operation via the user interface.

Prerequisite: Turn OFF the respective circuit breaker.

Prerequisite: Close the cold water supply.

Prerequisite: Open all the hot water tapping points to allow air to enter the system.

Prerequisite: Remove the top panel. See "7.2.5 To open the indoor unit" [▶ 78].

1 Remove the clip that fixes the domestic hot water OUT pipe.

2 Disconnect the pipe such that the tank is accessible for visual inspection (e.g. with an endoscope).

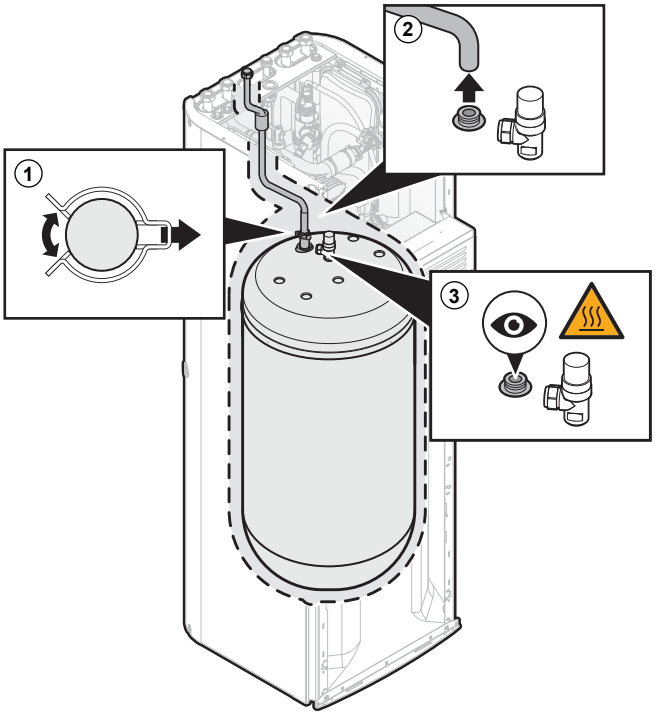

3 Reconnect the pipe to the tank.

4 Reinstall the clip to fix the domestic hot water OUT pipe.

13.5 About cleaning the water filter in case of trouble

INFORMATION

For yearly maintenance, you do not have to remove the water filter from the unit to clean it. But in case of trouble with the water filter, you might have to remove it so that you can thoroughly clean it. Then you need to do as follows:

- "13.5.1 To remove the water filter" [▶ 184]
- "13.5.2 To clean the water filter in case of trouble" [▶ 185]
- "13.5.3 To install the water filter" [▶ 186]

13.5.1 To remove the water filter

Prerequisite: Stop the unit operation via the user interface.

Prerequisite: Turn OFF the respective circuit breaker.

1 The water filter is located behind the switch box. To get access to it, see "7.2.5 To open the indoor unit" [▶ 78].

2 Close the stop valves of the water circuit.

3 Close the valve (if equipped) of the water circuit towards the expansion vessel.

4 Remove the cap on the bottom of the magnetic filter/dirt separator.

5 Connect a drain hose to the bottom of the water filter.

6 Open the valve on the bottom of the water filter to drain water from the water circuit. Collect the drained water in a bottle, sink,… using the installed drain hose.

7 Remove the 2 clips that fix the water filter.

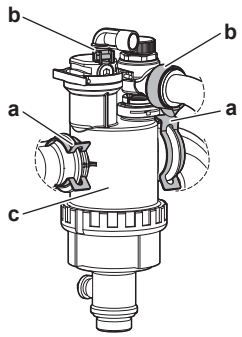

a Clip
b Ring clamp
c Magnetic filter/dirt separator

8 Unscrew the 2 ring clamps and remove the 2 hoses to the gas separator box.

9 Remove the water filter.

10 Remove the drain hose from the water filter.

NOTICE

Although the water circuit is drained, some water may be spilled when removing the magnetic filter/dirt separator from the filter housing. ALWAYS clean up spilled water.

13.5.2 To clean the water filter in case of trouble

1 Remove the water filter from the unit. See "13.5.1 To remove the water filter" [▸ 184].

NOTICE

To protect the piping connected to the magnetic filter/dirt separator from damage it is recommended to perform this procedure with the magnetic filter/dirt separator removed from the unit.

2 Unscrew the bottom of the water filter housing. Use an appropriate tool if needed.

NOTICE

Opening the magnetic filter/dirt separator is ONLY required in case of severe issues. Preferably this action is never to be done during the complete lifetime of the magnetic filter/dirt separator.

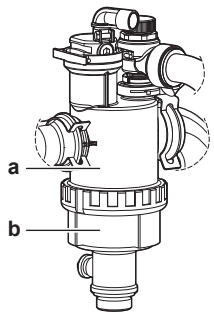

a Bottom part to be unscrewed
b Water filter housing

3 Remove the strainer and the rolled-up filter from the water filter housing and clean with water.

4 Install the cleaned rolled-up filter and strainer in the water filter housing.

INFORMATION

Correctly install the strainer in the magnetic filter/dirt separator housing using the protrusions.

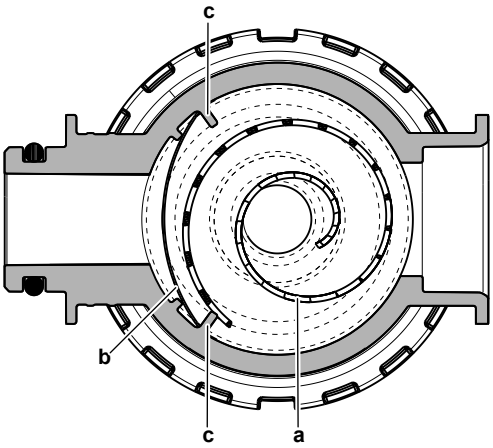

a Rolled-up filter
b Strainer
c Protrusion

5 Install and properly tighten the bottom of the water filter housing.

13.5.3 To install the water filter

NOTICE

Check the condition of the O-rings and replace if needed. Apply water or silicon grease to the O-rings before installation.

1 Re-connect the 2 hoses and screw on the 2 ring clamps. As the hoses to the gas separator are flexible, it is easier to screw on the ring clamps before the water filter is in its final position.

2 Install the water filter in the correct location.

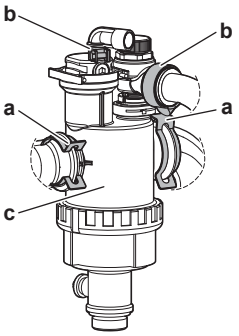

a Clip
b Ring clamp
c Magnetic filter/dirt separator

3 Install the 2 clips to fix the water filter to the water circuit pipes.

4 Open the valve (if equipped) of the water circuit towards the expansion vessel.

CAUTION

Make sure to open the valve (if equipped) towards the expansion vessel, otherwise the overpressure will be generated.

5 Open the stop valves and add water to the water circuit if needed.

14 Troubleshooting

Contact

For the symptoms listed below, you can try to solve the problem yourself. For any other problem, contact your installer. You can find the contact/helpdesk number via the user interface.

1	Go to [6.2]: `Information` > `Dealer information`.

In this chapter

14.1 Overview: Troubleshooting 188
14.2 Precautions when troubleshooting 188
14.3 Solving problems based on symptoms 189
14.3.1 Symptom: The unit is NOT heating or cooling as expected 189
14.3.2 Symptom: Hot water does NOT reach the desired temperature 191
14.3.3 Symptom: The compressor does NOT start (space heating or domestic water heating) 191
14.3.4 Symptom: The system is making gurgling noises after commissioning 192
14.3.5 Symptom: The pump is making noise (cavitation) 192
14.3.6 Symptom: The pressure relief valve opens 193
14.3.7 Symptom: The water pressure relief valve leaks 193
14.3.8 Symptom: The space is NOT sufficiently heated at low outdoor temperatures 194
14.3.9 Symptom: The pressure at the tapping point is temporarily unusually high 195
14.3.10 Symptom: Tank disinfection function is NOT completed correctly (AH-error) 195
14.4 Solving problems based on error codes 196
14.4.1 To display the help text in case of a malfunction 196
14.4.2 To use the malfunction filter 197
14.4.3 To check the malfunction history 200
14.4.4 Error codes of the unit 200

14.1 Overview: Troubleshooting

This chapter describes what you have to do in case of problems.

It contains information about:

- Solving problems based on symptoms
- Solving problems based on error codes

Before troubleshooting

Carry out a thorough visual inspection of the unit and look for obvious defects such as loose connections or defective wiring.

14.2 Precautions when troubleshooting

DANGER: RISK OF ELECTROCUTION

DANGER: RISK OF BURNING/SCALDING

WARNING

- When carrying out an inspection on the switch box of the unit, ALWAYS make sure that the unit is disconnected from the mains. Turn off the respective circuit breaker.
- When a safety device was activated, stop the unit and find out why the safety device was activated before resetting it. NEVER shunt safety devices or change their values to a value other than the factory default setting. If you are unable to find the cause of the problem, call your dealer.

WARNING

Prevent hazards due to inadvertent resetting of the thermal cut-out: power to this appliance MUST NOT be supplied through an external switching device, such as a timer, or connected to a circuit that is regularly turned ON and OFF by the utility.

14.3 Solving problems based on symptoms

14.3.1 Symptom: The unit is NOT heating or cooling as expected

Possible causes	Corrective action
The temperature setting is NOT correct	Check the temperature setting on the remote controller. Refer to the operation manual.

Possible causes	Corrective action
The water flow is too low	Check and make sure that: ▪ All shut-off valves of the water circuit are completely open. ▪ The water filter is clean. Clean if necessary. ▪ There is no air in the system. Purge air if necessary. You can purge air manually or use the automatic air purge function (see "11.4.5 To perform an air purge" [▸ 168]). ▪ The water pressure is >1 bar. ▪ The expansion vessel is NOT broken. ▪ The resistance in the water circuit is NOT too high for the pump (see the ESP curve in the "Technical data" chapter). ▪ If the following error codes[(a)] appear, it could result in certain actuators are not able to operate, which could lead to not starting the operation in that mode: 7H-22, 7H-18, 7H-19 Refer to "11.4.4 To check the minimum flow rate" [▸ 168] to check the requirements and adjust if necessary. ▪ If the following error codes[(a)] appear, it means that the minimum flow requirements of the unit are not met: 7H-20, 7H-21 Refer to "11.4.4 To check the minimum flow rate" [▸ 168] to check the requirements and adjust if necessary. If the problem persists after you have conducted all of the above checks, contact your dealer. In some cases, it is normal that the unit decides to use a low water flow.
The water volume in the installation is too low	Make sure that the water volume in the installation is above the minimum required value (see "8.1.3 To check the water volume and flow rate" [▸ 91]).

[(a)] See "14.4.4 Error codes of the unit" [▸ 200] for more information about the 7H error codes (e.g. circuit information).

14.3.2 Symptom: Hot water does NOT reach the desired temperature

14.3.3 Symptom: The compressor does NOT start (space heating or domestic water heating)

Possible causes	Corrective action
The unit must start up out of its operation range (the water temperature is too low) In certain conditions the entering water temperature must be increased via the backup heater to get the heat pump in range. For example this can happen when the wind conditions are critical and there is no wind protection, see "7.1.1 Installation site requirements of the outdoor unit" [▸ 71].	If the backup heater doesn't start either, check and make sure that: ▪ The power supply to the backup heater is correctly wired. ▪ The backup heater thermal protector is NOT activated. If the backup heater cannot achieve the required minimum entering water temperature. It may be required to start up with a small water volume. To do this, gradually open the heat emitters. As a result, the water temperature will gradually rise. Monitor the inlet water temperature and make sure it does NOT drop If the problem persists, contact your dealer.
The preferential kWh rate power supply settings and electrical connections do NOT match.	This should match with the connections as explained in: ▪ "9.3.2 To connect the main power supply" [▸ 123] ▪ "9.1.4 About preferential kWh rate power supply" [▸ 108] ▪ "9.1.5 Overview of electrical connections except external actuators" [▸ 109]
There is a demand response request which can either limit the power to the heat pump or force off the heat pump.	Refer to [9.14]:`Settings` > `Demand response`
Domestic hot water (including disinfection) and space heating operation are scheduled to start at the same time.	Change the schedule to not start both operation modes at the same moment.
The minimum flow is not guaranteed in that circuit to allow operation.	▪ If the following error codes[(a)] appear, it could result in certain actuators are not able to operate, which could lead to not starting the operation in that mode: 7H-22, 7H-18, 7H-19 Refer to "11.4.4 To check the minimum flow rate" [▸ 168] to check the requirements and adjust if necessary. ▪ If the following error codes[(a)] appear, it means that the minimum flow requirements of the unit are not met: 7H-20, 7H-21 Refer to "11.4.4 To check the minimum flow rate" [▸ 168] to check the requirements and adjust if necessary.

Possible causes	Corrective action
The compressor cannot start when the backup heater is not powered.	If the backup heater is not powered, then: ▪ Space heating and tank heat-up is not allowed. ▪ Error AA-01 `Backup heater overheated or BUH power cable not connected` is generated.

[a] See "14.4.4 Error codes of the unit" [▸ 200] for more information about the 7H error codes (e.g. circuit information).

14.3.4 Symptom: The system is making gurgling noises after commissioning

Possible cause	Corrective action
There is air in the system.	Purge air from the system.[a]
Incorrect hydraulic balance.	To be performed by the installer: 1 Perform hydraulic balancing to assure that the flow is correctly distributed between the emitters. 2 If hydraulic balancing is not sufficient, it is recommended to increase the `Delta T heating` ([1.14] / [2.14]) value. 3 If hydraulic balancing is not sufficient, it is recommended to increase the `Delta T cooling` ([1.18] / [2.17]) value.
Various malfunctions.	Check if 🔔 or ⚠ is displayed on the home screen of the user interface. See "14.4.1 To display the help text in case of a malfunction" [▸ 196] for more information about the malfunction.

[a] We recommend to purge air with the air purge function of the unit (to be performed by the installer). If you purge air from the heat emitters or collectors, mind the following:

WARNING

Air purging heat emitters or collectors. Before you purge air from heat emitters or collectors, check if 🔔 or ⚠ is displayed on the home screen of the user interface.

- If not, you can purge air immediately.
- If yes, make sure that the room where you want to purge air is sufficiently ventilated. **Reason:** In case of a breakdown, refrigerant might leak into the water circuit, and subsequently into the room when you purge air from the heat emitters or collectors.

14.3.5 Symptom: The pump is making noise (cavitation)

Possible causes	Corrective action
There is air in the system	Purge air manually or use the automatic air purge function (see "11.4.5 To perform an air purge" [▸ 168]).

Possible causes	Corrective action
The water pressure at the pump inlet is too low	Check and make sure that: ▪ The water pressure is >1 bar. ▪ The water pressure sensor is not broken. ▪ The expansion vessel is NOT broken. ▪ The pre-pressure setting of the expansion vessel is correct (see "8.1.4 Changing the pre-pressure of the expansion vessel" [▶ 94]).

14.3.6 Symptom: The pressure relief valve opens

Possible causes	Corrective action
The expansion vessel is broken	Replace the expansion vessel.
The water volume in the installation is too high	Make sure that the water volume in the installation is below the maximum allowed value (see "8.1.3 To check the water volume and flow rate" [▶ 91] and "8.1.4 Changing the pre-pressure of the expansion vessel" [▶ 94]).
The water circuit head is too high	The water circuit head is the difference in height between the indoor unit and the highest point of the water circuit. If the indoor unit is located at the highest point of the installation, the installation height is considered 0 m. The maximum water circuit head is 10 m. Check the installation requirements.

14.3.7 Symptom: The water pressure relief valve leaks

Possible causes	Corrective action
Dirt is blocking the water pressure relief valve outlet	Check whether the pressure relief valve works correctly by turning the red knob on the valve counterclockwise: ▪ If you do NOT hear a clacking sound, contact your dealer. ▪ If the water keeps running out of the unit, close both the water inlet and outlet shut-off valves first and then contact your dealer.

14.3.8 Symptom: The space is NOT sufficiently heated at low outdoor temperatures

Possible causes	Corrective action
The backup heater operation is not activated	Check the following: ▪ The backup heater is allowed for capacity shortage. This is defined by [5.6.1] `Capacity shortage setting` - when selected `Never` , the backup heater won't be allowed for capacity shortage. - when selected `Always` , the backup heater will be allowed for capacity shortage independent of the ambient. - when selected `Below equilibrium` , the backup heater allowance depends on the ambient temperature. ▪ The backup heater overcurrent circuit breaker is on. If not, turn it back on. ▪ The thermal protector of the backup heater is NOT activated. If it has, check the following, and then press the reset button in the switch box: - The water pressure - Whether there is air in the system - The air purge operation
The backup heater equilibrium temperature has not been configured correctly	Increase the equilibrium temperature to activate the backup heater operation at a higher outdoor temperature. ▪ Make sure that [5.6.1] `Capacity shortage setting` is set to `Below equilibrium`. ▪ Go to [5.6.2] `Settings` > `Capacity shortage` > `Equilibrium setpoint` to set the desired equilibrium temperature.
There is air in the system.	Purge air manually or automatically. See the air purge function in the chapter "11 Commissioning" [▶ 156].

Possible causes	Corrective action
Too much heat pump capacity is used for heating domestic hot water (applies only to installations with a domestic hot water tank)	Check if the `Space heating priority` settings have been configured appropriately: ▪ Make sure that the `Space heating priority` has been enabled. Go to [5.28.1]: `Settings` > `Balancing` > `Space heating priority` ▪ If necessary, increase the "space heating priority temperature" to activate backup heater operation at a higher outdoor temperature. Go to [5.28.2] `Settings` > `Balancing` > `Priority temperatures` and increase the `Space heating` temperature. **Remark:** When [5.28.1] `Space heating priority` is active, the boiler will take over for space heating, in case [5.32] `Bivalent present` is enabled.

14.3.9 Symptom: The pressure at the tapping point is temporarily unusually high

Possible causes	Corrective action
Failing or blocked pressure relief valve.	▪ Flush and clean the complete tank including the piping between pressure relief valve and the cold water inlet. ▪ Replace the pressure relief valve.

14.3.10 Symptom: Tank disinfection function is NOT completed correctly (AH-error)

Possible causes	Corrective action
The disinfection function was interrupted by domestic hot water tapping	Program the start-up of the disinfection function when the coming 4 hours NO domestic hot water tapping is expected.
The disinfection function was interrupted by a too strict quiet mode level.	▪ Select a less strict quiet mode level, or ▪ Allow the additional heat source to take over during tank heat-up (see [4.17] `Add. source DHW always on request` and [4.20] `Add. source delay timer`).

Possible causes	Corrective action
Large domestic hot water tapping happened recently before the programmed start-up of the disinfection function	If in [4.7] `Domestic hot water` > `Heat up mode` the mode `Reheat` or `Schedule and reheat` is selected, it is recommended to program the start-up of the disinfection function at least 4 hours later than the last expected large hot water tapping. This start-up can be set by installer settings (disinfection function). If in [4.7] `Domestic hot water` > `Heat up mode` the mode `Scheduled` is selected, it is recommended to program a scheduled action 3 hours before the scheduled start-up of the disinfection function to preheat the tank.

14.4 Solving problems based on error codes

If the unit runs into a problem, the user interface displays an error code. It is important to understand the problem and to take measures before resetting an error code. Please contact Daikin or Daikin Stand-By-Me Certified Partner.

This chapter gives you an overview of most possible error codes and their descriptions as they appear on the user interface.

INFORMATION

See the service manual for:

- The complete list of error codes
- A more detailed troubleshooting guideline for each error

14.4.1 To display the help text in case of a malfunction

In case of a malfunction, the following icon will appear on the home screen depending on the severity:

- ⚠: Error
- 🔔: Warning
- ⓘ: Information

You can get a short and a long description of the malfunction as follows:

1	Go to [11] `Malfunctioning`. **Result:** The ongoing malfunctions are shown with the following information: ▪ The `Level` icon: - ⚠: `Error` - 🔔: `Warning` - ⓘ: `Information` ▪ The error code ▪ The `Type` icon: - S: `Safety`: these are critical errors that can result in an unsafe situation (e.g. refrigerant leak). - P: `Protection`: these are errors related to the protection of the user or the system (eg overheating/disinfection/undercooling). - T: `Technical`: these are all other errors indicating a technical problem of the unit or peripherals (e.g. sensor abnormality).
2	Tap on the error message in the error screen. **Result:** A long description of the error is displayed on the screen. **Note:** If the description is too long, use the up/down arrows on the right-hand side of the text box to scroll through the entire text.

14.4.2 To use the malfunction filter

You have the option to filter the list of malfunctions.

To add a filter

1	Go to [11] `Malfunctioning`. **Result:** The ongoing malfunctions are shown: 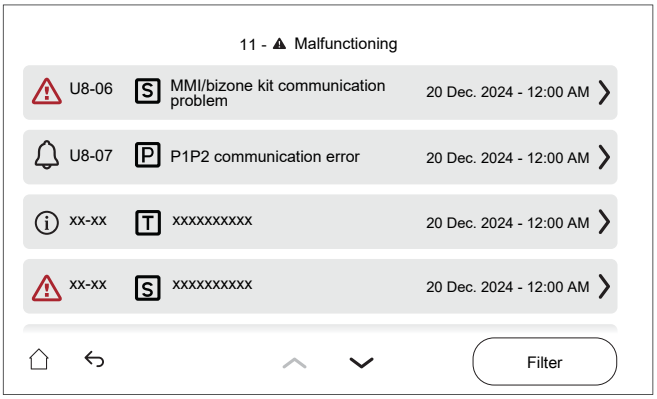

2	Tap the `Filter` button. **Result:** The `Filter` screen appears: 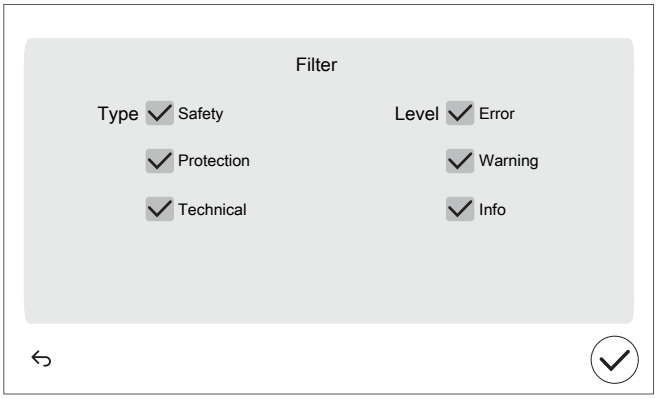
2	Select/clear which types and levels you want to display: 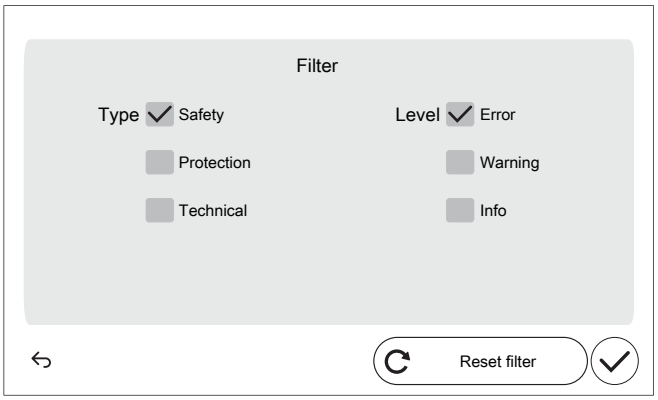
3	Confirm with the ✓ button. **Result:** Only malfunctions of the selected type(s) and level(s) are displayed: 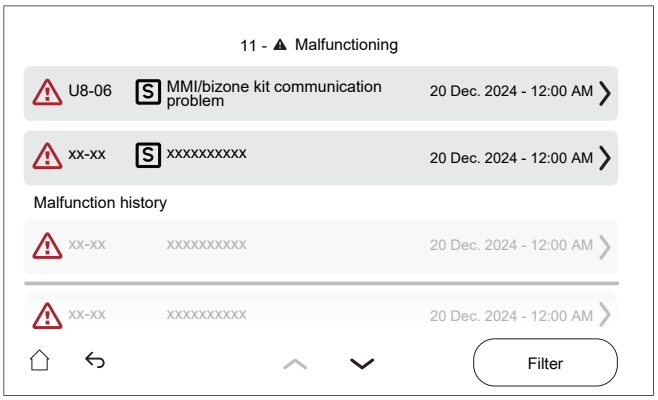

To reset a filter

1 In the filtered [11] `Malfunctioning`.screen, tap the `Filter` button:

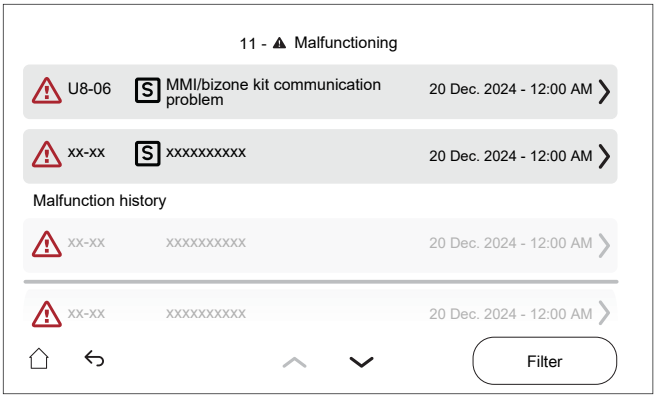

Result: Your previously set filter appears:

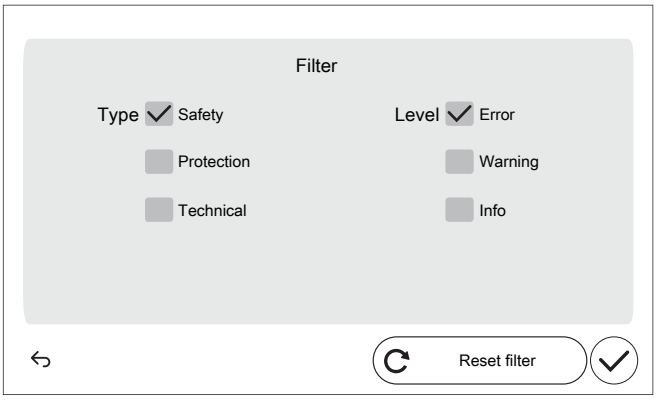

2 Tap `Reset filter` to restore to the default malfunctioning list view:

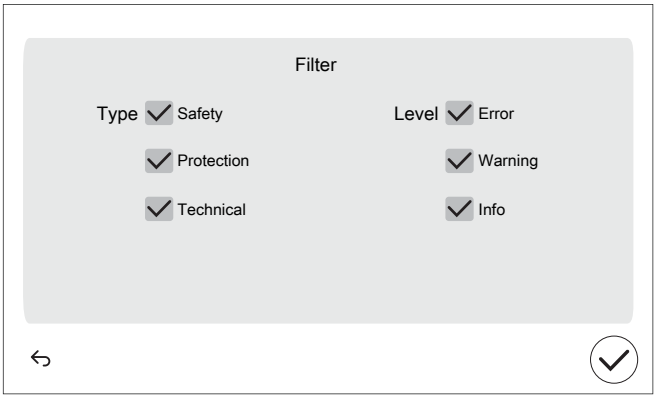

3 Confirm with the ✓ button.

Result: All ongoing malfunctions are shown again:

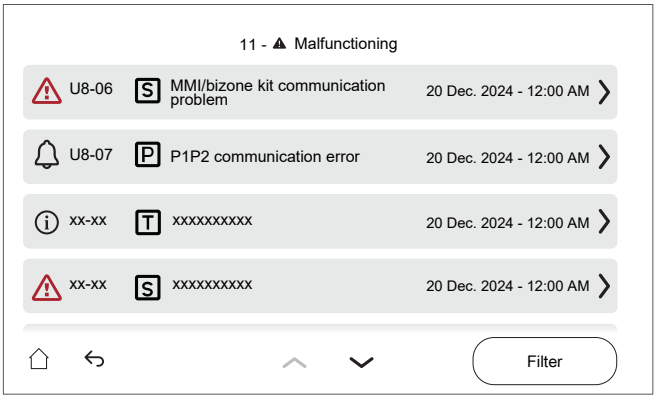

14.4.3 To check the malfunction history

Always check the malfunction history while troubleshooting.

Conditions: The user permission level is set to advanced end user.

1	Go to [11]: `Malfunction history`.

You see a list of the most recent malfunctions.

14.4.4 Error codes of the unit

Error code	#	Title	Trigger	Effect	Reset
7H-04		Water flow problem during domestic hot water production	Water flow abnormality determined mainly during DHW.	Heat pump will stop operating	Automatic
7H-05		Flow abnormality during space heating operation	Minimum flow requirement during space heating operation was not reached	Heat pump will stop operating	Automatic
7H-06		Abnormal flow during cooling operation	Minimum flow requirement during cooling on the emitter circuit was not reached	Heat pump will stop operating	Manual
7H-09		Abnormal flow during emitter defrost	Minimum flow requirement during defrost on the emitter circuit was not reached	Heat pump will stop operating	Manual
7H-10		Abnormal flow during tank defrost	Minimum flow requirement during defrost on the tank circuit was not reached	Heat pump will stop operating	Manual
7H-11		Flow abnormality during 4-way valve in cooling	Minimum flow requirements not reached while 4-way valve is in cooling	Heat pump will stop operating	Manual
7H-12		Main zone pump blocked abnormality	Main zone pump blocked abnormality	Pump will stop running.	Automatic
7H-13		Main zone pump electrical fault abnormality	Main zone pump electrical fault abnormality	Pump will stop running.	Automatic

Error code	#	Title	Trigger	Effect	Reset
7H-14		Add. zone pump communication error	Communication abnormality between indoor unit and add. zone pump	Unit will continue operation.	Automatic
	Once there is a communication error on the pump, the pump will go to full speed. This results in inefficient behaviour of the unit and potential flow noises in the emitter circuit. **Note:** communication errors should be corrected while the power is OFF.				
7H-15		Add. zone pump blocked abnormality	Add. zone pump blocked abnormality	Pump will stop running.	Automatic
7H-16		Add. zone pump electrical fault abnormality	Add. zone pump electrical fault abnormality	Pump will stop running.	Automatic
7H-17		Main zone pump communication error	Communication abnormality between indoor unit and main zone pump	Unit will continue operation.	Automatic
	Once there is a communication error on the pump, the pump will go to full speed. This results in inefficient behaviour of the unit and potential flow noises in the emitter circuit. **Note:** communication errors should be corrected while the power is OFF.				
7H-18		Water flow requirement problem at space cooling request	Minimum water flow requirement at space cooling request is not reached	The unit requires a minimum flow rate to remain operational	Automatic
7H-19		Water flow requirement problem at tank heat-up request	Minimum water flow requirement at tank heat-up request is not reached	The unit requires a minimum flow rate to remain operational	Automatic
7H-20		Water flow requirement problem on emitter hydraulic circuit	Minimum water flow requirement on emitter hydraulic circuit is not reached	The unit requires a minimum flow rate to remain operational	Manual
7H-21		Water flow requirement problem on tank hydraulic circuit	Minimum water flow requirement on tank hydraulic circuit is not reached	The unit requires a minimum flow rate to remain operational	Manual

Error code	#	Title	Trigger	Effect	Reset
7H-22		Water flow requirement problem at space heating request	Minimum water flow requirement at space heating request is not reached	The unit requires a minimum flow rate to remain operational	Automatic
	The error is displayed when the minimum required flow is not reached during a heating request or during Water pipe freeze prevention .				
7H-23		Main zone pump communication error	Communication abnormality between indoor unit and main zone pump	Unit will stop operating.	Automatic
	Once there is a communication error on the pump, the pump will go to full speed. This results in inefficient behaviour of the unit and potential flow noises in the emitter circuit. **Note:** communication errors should be corrected while the power is OFF.				
7H-24		Add. zone pump communication error	Communication abnormality between indoor unit and add. zone pump	Unit will stop operating.	Automatic
	Once there is a communication error on the pump, the pump will go to full speed. This results in inefficient behaviour of the unit and potential flow noises in the emitter circuit. **Note:** communication errors should be corrected while the power is OFF.				
80-03		Entering water temperature thermistor main zone abnormality	Entering water thermistor main zone is malfunctioning	Unit will continue operation.	Automatic
	Note: this error exists only for a bizone unit.				
80-04		Entering water temperature thermistor add. zone abnormality	Entering water thermistor additional zone is malfunctioning	Unit will continue operation.	Automatic
	Note: this error exists only for a bizone unit.				
81-00		Exit water temperature thermistor after BUH abnormality	Exit water temperature thermistor after BUH is malfunctioning	Heat pump and backup heater will stop operating for space heating and domestic hot water	Automatic
81-05		Loose hanging tank thermistor	Loose hanging tank thermistor is detected	Heat pump will stop operating	Manual
	▪ For floor-standing and ECH_2O indoor units: middle tank thermistor ▪ For wall-mounted indoor units: tank thermistor				

Error code	#	Title	Trigger	Effect	Reset
81-06		Entering water temperature thermistor abnormality (indoor unit)	Entering water temperature thermistor (indoor unit) is malfunctioning	Unit will continue operation.	Automatic
	Refer to the wiring diagram part number R1T (A1P) for the connection of the thermistor.				
81-07		Exit water temperature thermistor after tank valve abnormality	Exit water temperature thermistor after tank valve is malfunctioning	Unit will continue operation.	Automatic
81-10		Mixed water thermistor abnormality (mixing kit)	Mixed water temperature thermistor (mixing kit) is malfunctioning.	Space heating/ cooling operation will stop for affected zone	Automatic
89-01		Heat exchanger freeze-up protection activated during defrost operation	Heat exchanger freeze-up protection activated during defrost on the emitter or tank circuit.	Heat pump will stop operating	Manual
89-02		Interruption defrost due to low water volume	Plate heat exchanger freeze-up protection activated during defrost on the emitter circuit (defrost executed on a very low volume). The next defrost will be executed on the tank circuit.	Heat pump will stop operating	Automatic
89-03		Interruption defrost due to low water volume	Plate heat exchanger freeze-up protection activated during defrost on the emitter circuit (auto retry)	Heat pump will stop operating	Automatic
89-04		Interruption defrost during tank defrost	Plate heat exchanger freeze-up protection activated during defrost on the tank circuit	Heat pump will stop operating	Automatic

Error code	#	Title	Trigger	Effect	Reset
89-05		Heat exchanger freeze-up protection activated during cooling operation. (error)	Heat exchanger freeze-up protection activated during cooling on the emitter circuit	Heat pump will stop operating	Manual
	This error can also occur during defrost operation.				
89-06		Heat exchanger freeze-up protection activated during cooling operation (warning)	Plate heat exchanger freeze-up protection activated during cooling on the emitter circuit (auto retry)	Heat pump will stop operating	Automatic
	This error can also occur during defrost operation.				
89-09		Heat exchanger freeze-up protection activated during 4-way valve in cooling	Heat exchanger freeze-up protection activated during 4-way valve in cooling while running on the emitter or tank circuit	Heat pump will stop operating	Manual
	This error can also occur during defrost operation.				
89-10		Heat exchanger freeze-up protection activated during 4-way valve in cooling	Heat exchanger freeze-up protection activated during 4-way valve in cooling while running on the emitter or tank circuit (auto retry)	Heat pump will stop operating	Automatic
	This error can also occur during defrost operation.				
89-11		Heat exchanger freeze-up protection activated during defrost operation	Heat exchanger freeze-up protection activated during defrost on the emitter or tank circuit.	Heat pump will stop operating	Automatic/ Manual
	This error can also occur during defrost operation.				

Error code	#	Title	Trigger	Effect	Reset
8C-03		Undercooling of the space cooling water circuit	The minimum water temperature in the space cooling water circuit is below the undercooling temperature	Pump will stop running.	Automatic
	This error is used to prevent that the space cooling water system is undercooling its operational limits. This general limit is a setting chosen by the installer to determine the minimum allowed temperature through the system. The minimum leaving water temperature **in the system** is decided based on setting [3.11] Undercooling setpoint.				
8C-04		Undercooling of the main zone water circuit	The minimum temperature in the main zone is below the undercooling temperature threshold	Pump will stop running.	Automatic
	This error is used to prevent that the main water circuit is undercooling its operational limits due to a stuck or broken mixing valve. It could result in low temperatures in the main circuit (e.g. underfloor heating system). The components of an underfloor heating system must be protected against low water temperature, as this can lead to sweat conditions The minimum leaving water temperature **in the main zone** is decided based on setting [1.20] Undercooling water circuit				
8H-00		Overheating of the space heating water circuit	The maximum water temperature in the space heating water circuit is above the overheating temperature	Unit will stop operating.	Automatic
	This error is used to prevent that the space heating water system is overheating. This general limit is a setting chosen by the installer to determine the maximum allowed temperature through the system. The maximum leaving water temperature **in the system** is decided based on setting [3.12] Overheating setpoint				

Error code	#	Title	Trigger	Effect	Reset
8H-01		Overheating of the main zone water circuit	The maximum temperature in the main zone is above the overheating temperature threshold	Pump will stop running.	Automatic
	This error is used to prevent that the main water circuit is overheating its operational limits due to a stuck or broken mixing valve. It could result in high temperatures in the main circuit (e.g. underfloor heating system). The components of an underfloor heating system must be protected against high water temperatures, as components such as e.g. screed can crack. The maximum leaving water temperature **in the main zone** is decided based on setting [1.19] `Overheating water circuit`				
8H-02		Overheating of the main zone water circuit thermostat	The thermostat of the main zone water circuit has tripped	Pump will stop running.	Automatic
8H-03		Overheating of the space heating water circuit thermostat	The thermostat of the space heating water circuit has tripped	Pump will stop running.	Automatic
8H-09		Backup heater stuck detection ongoing	The backup heater relay is currently being checked.	Unit will stop operating.	Automatic
	During initialisation of the unit (e.g. after setting change or power reset) the backup heater relays are checked for protective reasons.				
8H-10		Overheating mixed water safety thermostat (mixing kit)	The thermostat of the mixing kit has tripped.	Space heating/ cooling operation will stop for affected zone	Automatic
8H-11		Overheating/ undercooling mixed water circuit (mixing kit)	The maximum or minimum water temperature in the space heating/cooling water circuit is above or below the overheating/ undercooling temperature,	Space heating/ cooling operation will stop for affected zone	Automatic
	This error is used to prevent that the main water circuit is overheating or undercooling its operational limits due to a stuck or broken mixing valve. This error is triggered if the leaving water temperature is drastically exceeding the maximum setpoint or the minimum setpoint. Refer to [1.6] `Setpoint range`.				

Error code	#	Title	Trigger	Effect	Reset
A0-02		Indoor unit gas sensor detection	The indoor unit gas sensor has detected a gas leakage	Unit will stop operating.	Manual
AA-01		Backup heater overheated or BUH power cable not connected	Thermal protector of the backup heater is activated because temperature is rising too high. Or BUH power cable is not connected.	Heat pump and backup heater will stop operating for space heating and domestic hot water	Automatic
AA-07		Diverter valve is blocked or incorrect valve type is selected	Diverter valve is blocked or incorrect valve type is selected	Unit will stop operating.	Manual
	Reset Remark: Please check if the valve type setting is correct. Contact Daikin or Daikin Stand-By-Me Certified Partner if the problem persists.				
AA-08		Mixing valve is blocked or incorrect valve type is selected	Mixing valve is blocked or incorrect valve type is selected	Unit will stop operating.	Manual
	Reset Remark: Please check if the valve type setting is correct. Contact Daikin or Daikin Stand-By-Me Certified Partner if the problem persists.				
AA-09		Diverter valve is broken or incorrect valve type is selected	Diverter valve is broken or incorrect valve type is selected	Unit will stop operating.	Manual
	Reset Remark: Please check if the valve type setting is correct. Contact Daikin or Daikin Stand-By-Me Certified Partner if the problem persists.				
AA-10		Mixing valve is broken or incorrect valve type is selected	Mixing valve is broken or incorrect valve type is selected	Unit will stop operating.	Manual
	Reset Remark: Please check if the valve type setting is correct. Contact Daikin or Daikin Stand-By-Me Certified Partner if the problem persists.				
AA-11		Tank valve is blocked or incorrect valve type is selected	Tank valve is blocked or incorrect valve type is selected	Unit will stop operating.	Manual
	Reset Remark: Please check if the valve type setting is correct. Contact Daikin or Daikin Stand-By-Me Certified Partner if the problem persists.				

Error code	#	Title	Trigger	Effect	Reset
AA-12		Bypass valve is blocked or incorrect valve type is selected	Bypass valve is blocked or incorrect valve type is selected	Unit will stop operating.	Manual
	Reset Remark: Please check if the valve type setting is correct. Contact Daikin or Daikin Stand-By-Me Certified Partner if the problem persists.				
AA-13		Tank valve is broken or incorrect valve type is selected	Tank valve is broken or incorrect valve type is selected	Unit will stop operating.	Manual
	Reset Remark: Please check if the valve type setting is correct. Contact Daikin or Daikin Stand-By-Me Certified Partner if the problem persists.				
AA-14		Bypass valve is broken or incorrect valve type is selected	Bypass valve is broken or incorrect valve type is selected	Unit will stop operating.	Manual
	Reset Remark: Please check if the valve type setting is correct. Contact Daikin or Daikin Stand-By-Me Certified Partner if the problem persists.				
AH-00		Tank disinfection function not completed correctly	Disinfection setpoint is not reached within the required time or not kept for the required time.	Unit will continue operation.	Automatic/ Manual
	The disinfection error AH is automatically cleared after a successful disinfection, or you can manually clear it via [4.9] Clear disinfection malfunction. Beware, the disinfection function will only be repeated upon the next scheduled disinfection block!				
AJ-03		DHW long heat-up abnormality	Tank heat-up has been running abnormally long	Domestic hot water operation will stop	Manual
	Error AJ-03 is reset from the moment the error is reset on the user interface. Be aware that in this case disinfection will not be executed.				
C0-00		Flow sensor abnormality	Flow sensor is malfunctioning	Unit will stop operating.	Automatic
C0-14		Indoor gas sensor has a malfunction	Indoor gas sensor is disconnected	Unit will stop operating.	Manual
C0-15		Indoor gas sensor is disconnected	Indoor gas sensor is disconnected	Unit will stop operating.	Manual
CJ-02		Room thermistor abnormality	Room temperature thermistor of the user interface input is out of range.	Space heating/ cooling operation will stop for affected zone	Automatic

Error code	#	Title	Trigger	Effect	Reset
E0-06		Outdoor unit leakage detection error	Outdoor unit leakage detection error	Heat pump will stop operating	Manual
E1-00		OU: PCB defect	Outdoor unit main PCB detects that EEPROM is abnormal.	Heat pump will stop operating	Power cycle
E2-01		Leakage current detection error	Leakage current PCB has detected current leakage on power supply line of the unit.	Heat pump will stop operating	Power cycle
E2-06		Leakage current detection error	Electric leakage missing-core error	Heat pump will stop operating	Power cycle
E3-00		OU: Actuation of high pressure switch (HPS)	High pressure switch opens due to too high refrigerant pressure.	Heat pump will stop operating	Manual
E3-19		OU: Actuation of high pressure switch (HPS)	High pressure switch opens due to too high refrigerant pressure.	Heat pump will stop operating	Manual
E4-00		Abnormal suction pressure	Suction pressure was too low (detected by thermistor/ pressure sensor or low pressure switch) for several times.	Heat pump will stop operating	Manual
E5-00		OU: Overheat of inverter compressor motor	Compressor overload is detected.	Heat pump will stop operating	Manual
E7-01		OU: Malfunction of outdoor unit fan motor	Fan motor 1 lock	Heat pump will stop operating	Manual
E7-05		OU: Malfunction of outdoor unit fan motor	Fan motor 1 instantaneous overcurrent 1	Heat pump will stop operating	Manual

Error code	#	Title	Trigger	Effect	Reset
E7-61		OU: Malfunction of outdoor unit fan motor	Fan does not start after ON signal. It can occur that the error code is triggered when the fan motor is running caused by a faulty hall signal.	Heat pump will stop operating	Automatic
E7-63		OU: Malfunction of outdoor unit fan motor	Fan abnormality	Heat pump will stop operating	Manual
E9-01		Malfunction of electronic expansion valve	Electronic expansion valve is defective or not well connected.	Heat pump will stop operating	Power cycle
E9-02		Electronic expansion valve error due to wetness	Electronic expansion valve error due to wetness.	Heat pump will stop operating	Manual
E9-03		Malfunction of electronic expansion valve	Electronic expansion valve is defective or not well connected.	Heat pump will stop operating	Power cycle
EA-01		4WV switching error	Pressure drop and temperature difference over 4WV too low.	Heat pump will stop operating	Power cycle
EC-00		Abnormal increase tank temperature	Temperature of the tank is abnormally increasing. There is a potential problem with one of the heat sources connected to the tank.	Domestic hot water operation will stop	Manual
F3-01		OU: Malfunction of discharge pipe temperature	Discharge pipe thermistor temperature error	Heat pump will stop operating	Manual
F3-02		OU: Malfunction of discharge pipe temperature	Loosehanging discharge pipe thermistor	Heat pump will stop operating	Manual
F3-20		OU: Malfunction of discharge pipe temperature	Compressor shell thermistor temperature error	Heat pump will stop operating	Power cycle

Error code	#	Title	Trigger	Effect	Reset
F3-24		OU: Malfunction of discharge pipe temperature	Loosehanging compressor shell thermistor	Heat pump will stop operating	Manual
H0-02		Outdoor unit gas sensor malfunction	Sensor malfunction error 1	Heat pump will stop operating	Manual
H0-04		Outdoor unit gas sensor disconnection	Sensor disconnection error 1	Heat pump will stop operating	Manual
H1-00		External temperature thermistor abnormality	External temperature thermistor is malfunctioning	Unit will continue operation.	Automatic
H3-01		OU: Malfunction of high pressure switch (HPS)	High pressure switch is activated when compressor is off.	Heat pump will stop operating	Manual
H3-08		OU: Malfunction of high pressure switch (HPS)	High pressure switch is activated when compressor is off.	Heat pump will stop operating	Automatic
H7-01		OU: Malfunction of outdoor unit fan motor	OU: Malfunction of position detection sensor	Heat pump will stop operating	Manual
H7-31		Fan motor operation hours	Outdoor unit fan motor operation time exceeded the lifetime expectations. Consider replacing the fan motor.	Heat pump will stop operating	Automatic
H9-00		OU: Malfunction of outdoor air thermistor	Outdoor air thermistor input is out of range.	Heat pump will stop operating	Automatic
H9-01		OU: Malfunction of outdoor air thermistor	Outdoor air thermistor input is out of range.	Heat pump will stop operating	Automatic
HC-00		Tank thermistor abnormality	Tank temperature sensor problem	Domestic hot water operation will stop	Automatic
HC-01		Upper tank thermistor abnormality	Upper tank temperature sensor problem	Unit will continue operation.	Automatic

Error code	#	Title	Trigger	Effect	Reset
HC-02		Lower tank thermistor abnormality	Lower tank temperature sensor problem	Unit will continue operation.	Automatic
HJ-10		Water pressure sensor abnormality	Water pressure input is out of range.	Unit will continue operation.	Automatic
J3-01		Discharge pipe Thermistor Abnormality	Discharge pipe Thermistor Abnormality.	Heat pump will stop operating	Manual
J3-47		Discharge pipe Thermistor Abnormality	Discharge pipe Thermistor Abnormality.	Heat pump will stop operating	Manual
J5-00		Malfunction of suction pipe thermistor	suction pipe thermistor readout is out of range (short-circuit or open connection).	Heat pump will stop operating	Automatic when input is within range
J5-23		Malfunction of suction pipe thermistor	suction pipe thermistor readout is out of range (short-circuit or open connection).	Heat pump will stop operating	Automatic when input is within range
J6-00		OU: Malfunction of heat exchanger thermistor	Outdoor heat exchanger thermistor input is out of range.	Heat pump will stop operating	Automatic when input is within range
J6-31		Inlet water temperature Thermistor abnormality	Inlet water temperature Thermistor abnormality.	Heat pump will stop operating	Automatic
J6-32		Leaving water temperature thermistor Abnormality (outdoor unit)	Leaving water thermistor mesearument (outdoor unit) is out of range.	Heat pump will stop operating	Automatic
J6-36		OU: Malfunction of injection thermistor	Outdoor injection thermistor input is out of range.	Heat pump will stop operating	Automatic when input is within range
J6-42		OU: Malfunction of injection thermistor	Outdoor injection thermistor input is out of range.	Heat pump will stop operating	Automatic when input is within range
J8-00		Malfunction of refrigerant liquid thermistor	Refrigerant liquid thermistor readout is out of range (short-circuit or open connection).	Heat pump will stop operating	Automatic when input is within range

Error code	#	Title	Trigger	Effect	Reset
J9-23		Heat pipe thermistor abnormality	Malfunction of heat pipe thermistor	Heat pump will stop operating	Automatic
JA-01		OU: Malfunction of high pressure sensor	High pressure sensor detects an abnormal value.	Heat pump will stop operating	Automatic reset if the readout values comes within the range
JC-01		Evaporator pressure abnormality	Evaporator pressure abnormality	Heat pump will stop operating	Automatic reset if the readout values comes within the range
L1-01		Malfunction of INV PCB	Malfunction of INV PCB: Instantaneous overcurrent (at output of boot waveform)	Heat pump will stop operating	Manual
L1-02		Malfunction of INV PCB	Malfunction of INV PCB: Current sensor error	Heat pump will stop operating	Manual
L1-03		Malfunction of INV PCB	Malfunction of INV PCB: Current offset error	Heat pump will stop operating	Manual
L1-04		Malfunction of INV PCB	Malfunction of INV PCB: IGBT error / Power module error	Heat pump will stop operating	Manual
L1-05		Malfunction of INV PCB	Malfunction of INV PCB: Jumper setting error	Heat pump will stop operating	Manual
L1-06		Malfunction of INV PCB	Malfunction of INV PCB: SP/MP-PAM overvoltage (hardware detection)	Heat pump will stop operating	Manual
L1-27		Malfunction of INV PCB	Malfunction of INV PCB: Inverter EEPROM error	Heat pump will stop operating	Power cycle
L1-31		Malfunction of INV PCB	Malfunction of INV PCB: Error in internal power supply output	Heat pump will stop operating	Manual
L1-54		Malfunction of INV PCB	Malfunction of INV PCB	Unit will continue operation.	Automatic

Error code	#	Title	Trigger	Effect	Reset
L1-55		Malfunction of INV PCB	Malfunction of INV PCB: fan driver error	Heat pump will stop operating	Power cycle
L3-00		OU: Electrical box temperature rise problem	Switch box temperature is too high.	Heat pump will stop operating	Manual
L4-00		OU: Malfunction of inverter radiating fin temperature rise	Overheating of inverter radiation fin	Heat pump will stop operating	Manual
L4-01		OU: Malfunction of inverter radiating fin temperature rise	Overheating of inverter radiation fin	Heat pump will stop operating	Manual
L4-06		OU: Malfunction of inverter radiating fin temperature rise	Overheating of fan 1 radiation fin	Heat pump will stop operating	Manual
L4-07		OU: Malfunction of inverter radiating fin temperature rise	Overheating of fan 2 radiation fin	Heat pump will stop operating	Manual
L5-00		OU: Inverter instantaneous overcurrent (DC)	An output overcurrent is detected by checking the current that flows in the inverter DC section.	Heat pump will stop operating	Manual
L8-00		Malfunction triggered by a thermal protection in the inverter PCB	Malfunction by thermal protection inverter PCB	Heat pump will stop operating	Manual
L8-01		Malfunction triggered by a thermal protection in the inverter PCB	Malfunction by thermal protection inverter PCB: Electronic thermal 1	Heat pump will stop operating	Manual
L8-02		Malfunction triggered by a thermal protection in the inverter PCB	Malfunction by thermal protection inverter PCB: Electronic thermal 2	Heat pump will stop operating	Manual

Error code	#	Title	Trigger	Effect	Reset
L8-03		Malfunction triggered by a thermal protection in the inverter PCB	Malfunction by thermal protection inverter PCB: Step-out / speed reduction	Heat pump will stop operating	Manual
L8-04		Malfunction triggered by a thermal protection in the inverter PCB	Malfunction by thermal protection inverter PCB: Lightning detection	Heat pump will stop operating	Manual
L8-05		Malfunction triggered by a thermal protection in the inverter PCB	Malfunction by thermal protection inverter PCB: Time-limited overcurrent of inverter	Heat pump will stop operating	Manual
L8-14		Malfunction triggered by a thermal protection in the inverter PCB	Malfunction by thermal protection inverter PCB: inverter low-speed step-out	Heat pump will stop operating	Manual
L9-01		Malfunction in transmission system of outdoor unit	Stall prevention (current increase)	Heat pump will stop operating	Manual
L9-02		Malfunction in transmission system of outdoor unit	Stall prevention (startup failure)	Heat pump will stop operating	Manual
L9-03		Malfunction in transmission system of outdoor unit	Step-out	Heat pump will stop operating	Manual
L9-13		Malfunction in transmission system of outdoor unit	Output open-phase error determined	Heat pump will stop operating	Manual
LC-00		Malfunction in communication system of outdoor unit	Transmission error between inverter and outdoor unit	Heat pump will stop operating	Automatic
LC-01		Malfunction in communication system of outdoor unit	Transmission error between inverter and outdoor unit: Wiring failure	Heat pump will stop operating	Automatic

Error code	#	Title	Trigger	Effect	Reset
LC-02		Malfunction in transmission system of outdoor unit	Transmission error between inverter and outdoor unit: compressor microcontroller transmission failure	Heat pump will stop operating	Automatic
LC-03		Malfunction in transmission system of outdoor unit	Transmission error between inverter and outdoor unit: fan 1 microcontroller tranmission failure	Heat pump will stop operating	Automatic
LC-05		Malfunction in transmission system of outdoor unit	Transmission error between inverter and outdoor unit: Data error	Heat pump will stop operating	Automatic
LC-33		Malfunction in transmission system of outdoor unit	Transmission error between inverter and outdoor unit: Wiring failure to ACS PCB	Heat pump will stop operating	Automatic
LH-01		Converter error	Converter error	Unit will continue operation.	Automatic
P1-00		Open-phase power supply imbalance	Malfunction in transmission system inside outdoor unit (between Control and Inverter PCB, between Control and ACS PCB)	Unit will continue operation.	Automatic
P3-01		Abnormal direct current	Malfunction decision by exceeding direct current limit value.	Heat pump will stop operating	Automatic
P3-04		Abnormal direct current	Malfunction decision by exceeding direct current limit value.	Heat pump will stop operating	Automatic
P4-01		Fin thermistor abnormality	Fin thermistor abnormality	Heat pump will stop operating	Automatic

Error code	#	Title	Trigger	Effect	Reset
P4-02		Fin thermistor abnormality	Fan 1 fin temperature sensor error	Heat pump will stop operating	Automatic
P4-03		Fin thermistor abnormality	Fan 2 fin temperature sensor error	Heat pump will stop operating	Automatic
PJ-01		Capacity setting mismatch	Capacity settings in outdoor and indoor unit are not matching. Wrong combination of units.	Heat pump will stop operating	Power cycle
PJ-04		Inverter PCB mismatch	Inverter PCB mismatch	Heat pump will stop operating	Manual
PJ-09		Fan 1 mismatch	Fan 1 mismatch	Heat pump will stop operating	Manual
U0-04		OU: Shortage of refrigerant	Refrigerant shortage during first-time cooling operation. Possible clogging of refrigerant piping.	Heat pump will stop operating	Manual
U0-12		Refrigerant cooling dew condensation error	Refrigerant cooling part condensation error	Heat pump will stop operating	Manual
U0-13		OU: Shortage of refrigerant	Refrigerant shortage during heating operation	Heat pump will stop operating	Manual
U0-14		OU: Shortage of refrigerant	Refrigerant shortage during cooling operation	Heat pump will stop operating	Manual
U0-23		OU: Shortage of refrigerant	Blocking detection error	Heat pump will stop operating	Manual
U0-36		Low refrigerant pressure	Very low refrigerant pressure. Possibly the refrigerant has leaked from the unit.	Heat pump will stop operating	Automatic
U1-00		Malfunction by reverse phase/ open-phase	Open phase or reverse phase is detected by inverter PCB.	Heat pump will stop operating	Automatic

Error code	#	Title	Trigger	Effect	Reset
U1-01		Malfunction by reverse phase/ open-phase	Open phase or reverse phase is detected by inverter PCB.	Heat pump will stop operating	Manual
U2-01		Supply voltage error	Inverter undervoltage/ overvoltage	Heat pump will stop operating	Automatic
U2-02		Supply voltage error	Open-phase of power supply (undervoltage/ overvoltage during current-limiting operation)	Heat pump will stop operating	Manual
U2-03		Supply voltage error	PN short-circuit error	Heat pump will stop operating	Manual
U2-04		Supply voltage error	SP-PAM undervoltage confirmed	Heat pump will stop operating	Manual
U2-07		Supply voltage error	Converter error	Heat pump will stop operating	Power cycle
U2-31		Supply voltage error	instanteneous overcurrent	Unit will continue operation.	Automatic
U2-35		Supply voltage error	AC voltage sensor error	Heat pump will stop operating	Manual
U2-36		Supply voltage error	OU fan1 power supply voltage error	Heat pump will stop operating	Manual
U2-37		Supply voltage error	OU fan2 power supply voltage error	Heat pump will stop operating	Manual
U2-42		Supply voltage error	Voltage sensor failure	Heat pump will stop operating	Manual
U2-43		Supply voltage error	Overvoltage during operation	Heat pump will stop operating	Manual
U2-44		Supply voltage error	Undervoltage during operation	Heat pump will stop operating	Manual
U3-00		Underfloor heating screed dryout function not completed correctly	Underfloor heating screed dry-out is interupted.	Unit will stop operating.	Manual
	The underfloor heating screed dryout can be unsuccessful in case an issue happens which does not allow the backup heater or heat pump to continue operation. **Remark:** before starting an underfloor heating dryout program, the U3 error needs to be reset when in maintenance mode. During U3 error, the unit protects the piping against freezing.				

Error code	#	Title	Trigger	Effect	Reset
U4-00		Indoor/outdoor unit communication problem	Communication failure between outdoor and indoor unit.	Heat pump will stop operating	Automatic
	Remark: Error U4-00 could be linked to miswiring of the unit.				
U8-01		Connection with LAN adapter lost	Communication abnormality between indoor unit and router	Unit will stop operating.	Automatic
U8-02		Connection with room thermostat lost	Communication abnormality between indoor unit and room thermostat after connection was already made.	Space heating/ cooling operation will stop	Automatic
U8-03		No connection with room thermostat	Communication abnormality between indoor unit and room thermostat, connection not possible.	Unit will stop operating.	Automatic
U8-04		Unknown USB device	Unknown USB device.	Unit will continue operation.	Automatic
	If an U8-04 error occurs, the error can be reset after a successful update of the software. If the software is not successfully updated then you must make sure that your USB device has the FAT32 format.				
U8-06		MMI/bizone kit communication problem	Communication abnormality between MMI and bizone kit box.	Unit will continue operation.	Automatic
	Communication errors should be checked while the power is OFF.				
U8-07		P1P2 communication error	There is a problem in the P1P2 communication between the unit components.	Unit will stop operating.	Automatic
	If error U8-07 occurs during power ON, the error will pop-up. If error U8-07 occurs during power OFF, the error does not pop-up. In both cases, the error is listed in [11] Malfunction history.				
U8-11		Connection with the Wireless gateway lost	Connection with the Wireless gateway is lost.	Unit will stop operating.	Automatic

Error code	#	Title	Trigger	Effect	Reset
U8-22		Display PCB in bootloader	Display PCB in bootloader	Unit will continue operation.	Automatic
U8-23		Display PCB communication issue	Display PCB communication issue	Unit will continue operation.	Automatic
U8-24		Display PCB in back port mode	Display PCB in back port mode	Unit will continue operation.	Automatic
U8-25		Display PCB in self-test mode	Display PCB in self-test mode	Unit will continue operation.	Automatic
U8-26		Room thermostat software version compatibility error	Incompatible room thermostat is detected on the bus. Please update the device to the latest version using the Madoka Assisstant app.	Space heating/ cooling operation will stop for affected zone	Automatic
U8-27		Connection with multistep backup heater PCB lost	Connection with multistep backup heater PCB lost	Unit will stop operating.	Automatic
U8-28		Invalid DB error	The file used to upload EEPROM is invalid	Unit will continue operation.	Automatic
	Error only possible when there is a new software upload.				
U8-29		EEPROM loaded with errors	The EEPROM memory was loaded with errors	Unit will continue operation.	Automatic
	Error only possible when there is a new software upload.				
UA-05		Indoor/outdoor combination abnormality	Indoor-outdoor unit transmission error	Heat pump will stop operating	Automatic
UA-07		Indoor/outdoor combination abnormality	Indoor-outdoor unit transmission error	Heat pump will stop operating	Automatic
UA-09		Indoor/outdoor combination abnormality	Indoor-outdoor unit transmission error	Heat pump will stop operating	Automatic
UA-48		Outdoor unit standby power connector connection error	This error occurs when the stand-by power setting connector status changes while the outdoor power supply is on.	Unit will continue operation.	Automatic

Error code	#	Title	Trigger	Effect	Reset
UF-01		Indoor/outdoor miswiring detection	Miswiring detection between indoor and outdoor	Heat pump will stop operating	Automatic
UF-02		Reversed piping or bad communication wiring detection	Reversed piping or bad communication wiring detection	Heat pump will stop operating	Manual
UH-17		Indoor unit locked (R290)	Indoor unit locked state	Heat pump operation is not possible	Automatic
UH-18		Outdoor unit locked (R290)	Outdoor unit locked state	Heat pump will stop operating	Manual
UH-19		Too many attempts to unlock the unit	Too many attempts to unlock the unit	Unit will continue operation.	Automatic
UJ-14		AF communication error	Active filter CPU not communicating.	Unit will continue operation.	Automatic
UJ-20		AF warning	Active filter operation warning.	Unit will continue operation.	Automatic
UJ-26		AF caution	Active filter operation caution.	Unit will continue operation.	Automatic

NOTICE

When the unit is not able to achieve the minimum required flow rates, the user interface will display a 7H error. It is important to ensure this minimum flow rates at all time. How to check and correct the minimum flow rate, refer to "8.1.3 To check the water volume and flow rate" [▸ 91].

NOTICE

When a sensor is broken at the plate heat exchanger or the pressure sensor is broken in the outdoor unit, during operation which requires freeze-up protection. It is possible that due to these malfunctions, the user interface will display an 89 error.

NOTICE

It is only possible to reset R290 related errors outside maintenance mode.

Please contact a Stand-By-Me Certified Partner to clear this error.

INFORMATION

The user interface will display how to reset an error code.

15 Disposal

When you want to dispose of the unit, do NOT do it yourself but contact a Daikin certified technician.

NOTICE

Do NOT try to dismantle the system yourself: dismantling of the system, treatment of the refrigerant, oil and other parts MUST comply with applicable legislation. Units MUST be treated at a specialised treatment facility for reuse, recycling and recovery.

INFORMATION

Also read the precautions and requirements in the following chapters:

- "2 General safety precautions" [▸ 10]
- "3.1 Safety checklist before work on R290 units" [▸ 22]

In this chapter

15.1 To recover refrigerant 222
15.1.1 To manually open the electronic expansion valves 225

15.1 To recover refrigerant

When disposing of the outdoor unit, you need to recover its refrigerant.

- Use the service ports (**a**)(**b**) to recover refrigerant.
- Make sure the valves (**Y1E**, **Y3E**, **Y2S**, **Y3S**, **Y4S**) are open. If they are not open during refrigerant recovery, refrigerant remains trapped in the unit.

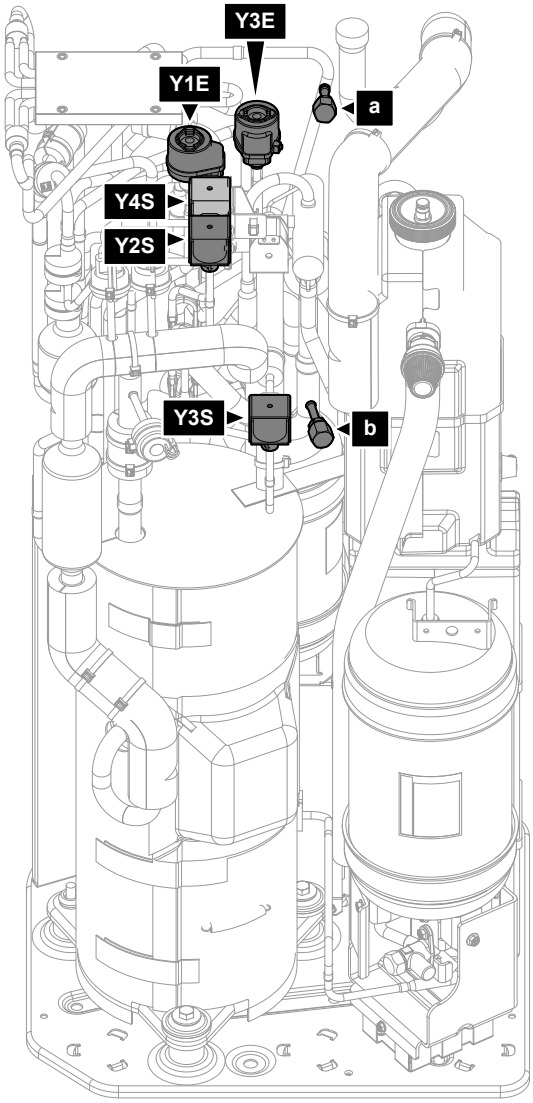

a	Service port 5/16" flare (HP)
b	Service port (LP)
Y1E	Electronic expansion valve (main)
Y3E	Electronic expansion valve (injection)
Y2S	Solenoid valve (low pressure bypass)
Y3S	Solenoid valve (hot gas bypass)
Y4S	Solenoid valve (liquid injection)

To recover refrigerant when power is ON (recommended)

Proceed as follows to completely and safely recover all refrigerant from the outdoor unit:

1. Make sure the unit is not running.
2. Go to [5.29] `Refrigerant recovery mode` and Confirm.

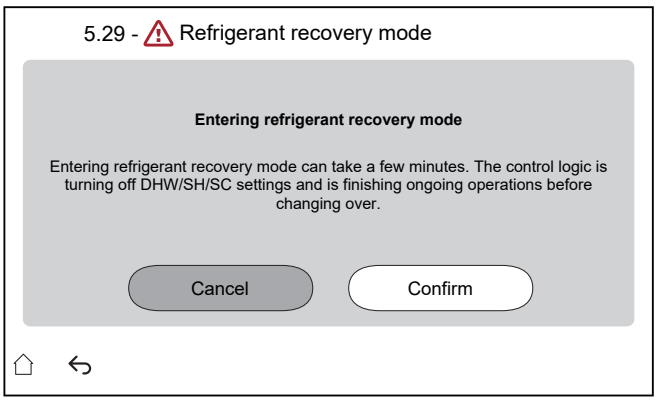

Result: The unit prepares to enter `Refrigerant recovery mode`. This can take a few minutes. To inform the installer the following screen appears:

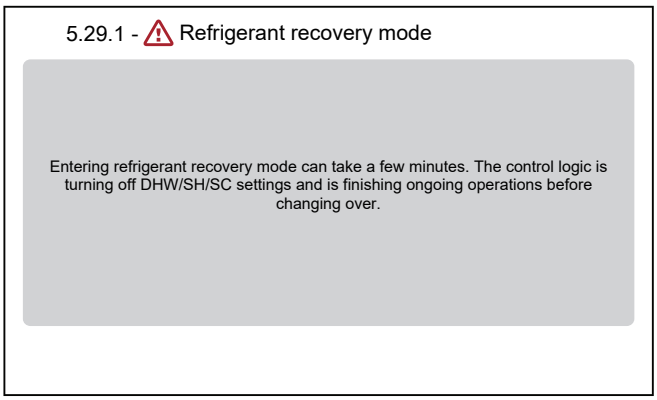

Result: The unit opens the valves (**Y***).

Remark: The protective functions remain active during the refrigerant recovery mode.

3 Recover refrigerant from the service ports (**a**) (**b**).

4 As long as the `Refrigerant recovery mode` is active, the interface remains on the screen below.

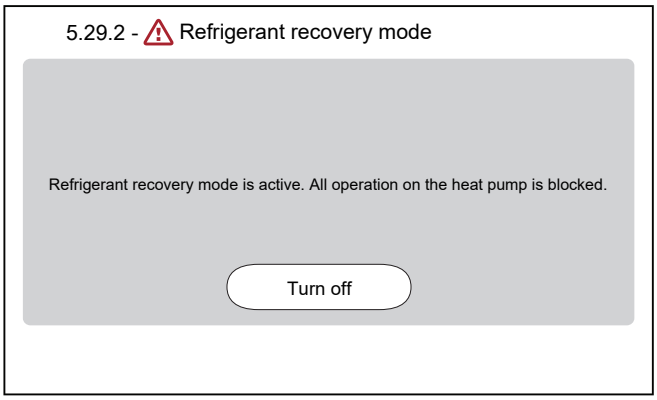

5 Tap `Turn off` to leave the `Refrigerant recovery mode` .

Result: The unit returns the valves (**Y***) to their initial state.

INFORMATION

If it is necessary to restart the unit after activating the refrigerant recovery mode, perform a power reset after turning off the refrigerant recovery mode.

It is important to wait at least 1 minute after turning off the refrigerant recovery mode before performing a power reset.

To recover refrigerant when power is OFF

1 Manually open the valves (**Y***) (see "15.1.1 To manually open the electronic expansion valves" [▸ 225]).

2 Recover refrigerant from the service port (**a**) (**b**).

15.1.1 To manually open the electronic expansion valves

Before recovering refrigerant, make sure the electronic expansion valves are open. When power is OFF, this has to be done manually.

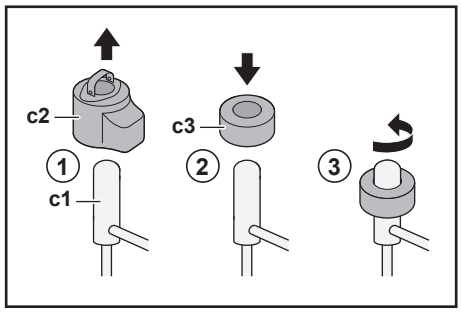

c1 Electronic expansion valve
c2 EEV coil
c3 EEV magnet

1 Remove the EEV coil (**c2**).

2 Slide an EEV magnet (**c3**) over the expansion valve (**c1**).

3 Turn the EEV magnet counter-clockwise to the fully open position of the valve. If you are not sure about what the open position is, turn the valve in its middle position so that refrigerant can pass.

16 Technical data

A **subset** of the latest technical data is available on the regional Daikin website (publicly accessible). The **full set** of the latest technical data is available on the Daikin Business Portal (authentication required).

In this chapter

16.1 Service space: Outdoor unit 227
16.2 Protective zone: Outdoor unit 229
16.3 Piping diagram: Outdoor unit 232
16.4 Piping diagram: Indoor unit 234
16.5 Wiring diagram: Outdoor unit 236
16.6 Wiring diagram: Indoor unit 240
16.7 Technical specifications: Domestic hot water tank 247
16.7.1 Test results in accordance with EN12897 (2016) 247
16.7.2 Warning label 248
16.8 ESP curve: Indoor unit 249

16.1 Service space: Outdoor unit

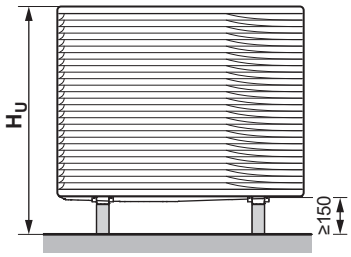

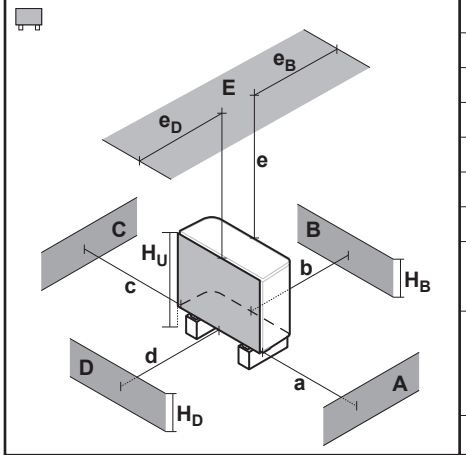

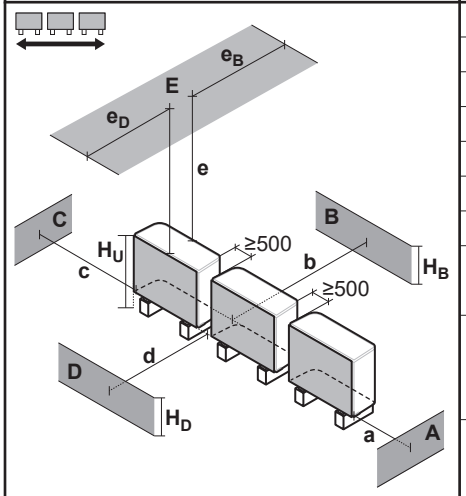

A~E	H_B H_D H_U		(mm)						
			a	b	c	d	e	e_B	e_D
B	—			≥300					
A, B, C	—		≥500	≥300	≥100				
B, E	—			≥300			≥1000		≤500
A, B, C, E	—		≥500	≥300	≥150		≥1000		≤500
D	—					≥500			
D, E	—					≥500	≥1000	≤500	
A, C	—		≥500		≥100				
B, D	(H_B OR H_D) ≤ H_U			≥300		≥500			
	(H_B AND H_D) > H_U		✕						
B, D, E	(H_B OR H_D) ≤ H_U	H_B>H_D		≥300		≥1000	≥1000		≤500
		H_B<H_D		≥300		≥1000	≥1000	≤500	
	(H_B AND H_D) > H_U		✕						
A, C, D, E	—		≥500		≥150	≥500	≥1000	≤500	
B	—			≥300					
A, B, C	—		≥500	≥300	≥500				
B, E	—			≥300			≥1000		≤500
A, B, C, E	—		≥500	≥300	≥500		≥1000		≤500
D	—					≥500			
D, E	—					≥500	≥1000	≤500	
A, C	—		≥500		≥500				
B, D	(H_B OR H_D) ≤ H_U			≥300		≥500			
	(H_B AND H_D) > H_U		✕						
B, D, E	(H_B OR H_D) ≤ H_U	H_B>H_D		≥300		≥1000	≥1000		≤500
		H_B<H_D		≥300		≥1000	≥1000	≤500	
	(H_B AND H_D) > H_U		✕						
A, C, D, E	—		≥500		≥500	≥500	≥1000	≤500	

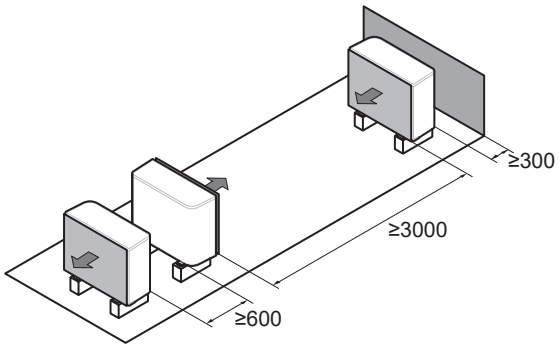

The symbols can be interpreted as follows:

General	Multiple outdoor units can be installed next to each other as shown in the rows: ▪ (side-to-side) ▪ (front-to-front / back-to-back) However, other units may only be installed in your unit's protective zone if they are of the same type (see "protective zone").
A, C	Right side and left side obstacles (walls/baffle plates)
B	Suction side obstacle (wall/baffle plate)
D	Discharge side obstacle (wall/baffle plate)
E	Top side obstacle (roof)
a,b,c,d,e	Minimum service space between the unit and obstacles A, B, C, D and E
$\mathbf{e}_B$	Maximum distance between the unit and the edge of obstacle E, in the direction of obstacle B
$\mathbf{e}_D$	Maximum distance between the unit and the edge of obstacle E, in the direction of obstacle D
$\mathbf{H}_U$	Height of the unit including the installation structure
$\mathbf{H}_B$,$\mathbf{H}_D$	Height of obstacles B and D
✕	NOT allowed

16.2 Protective zone: Outdoor unit

(mm)

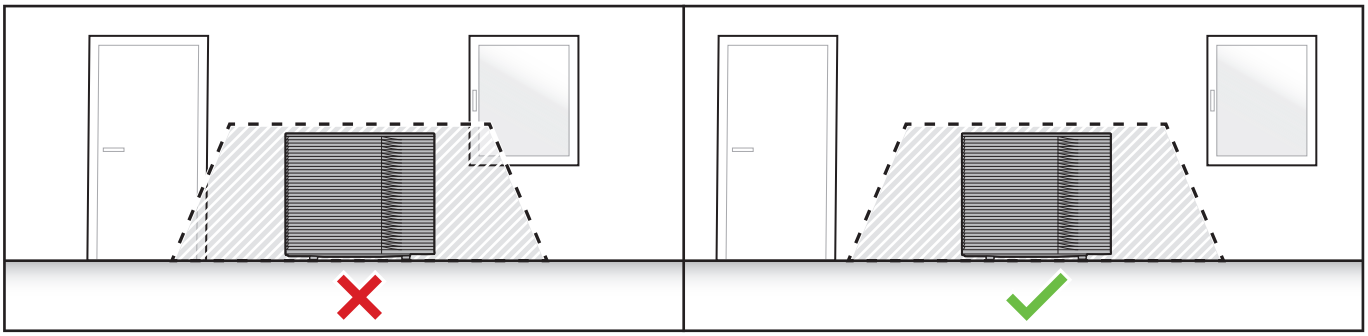

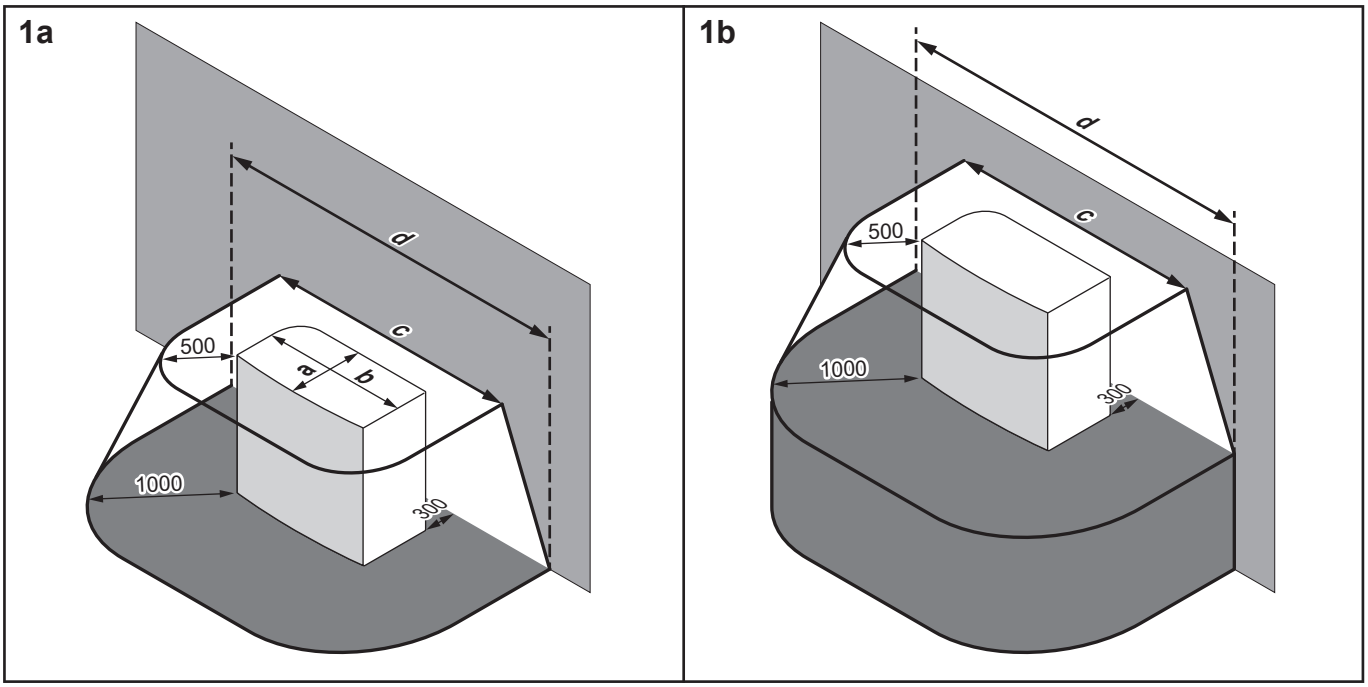

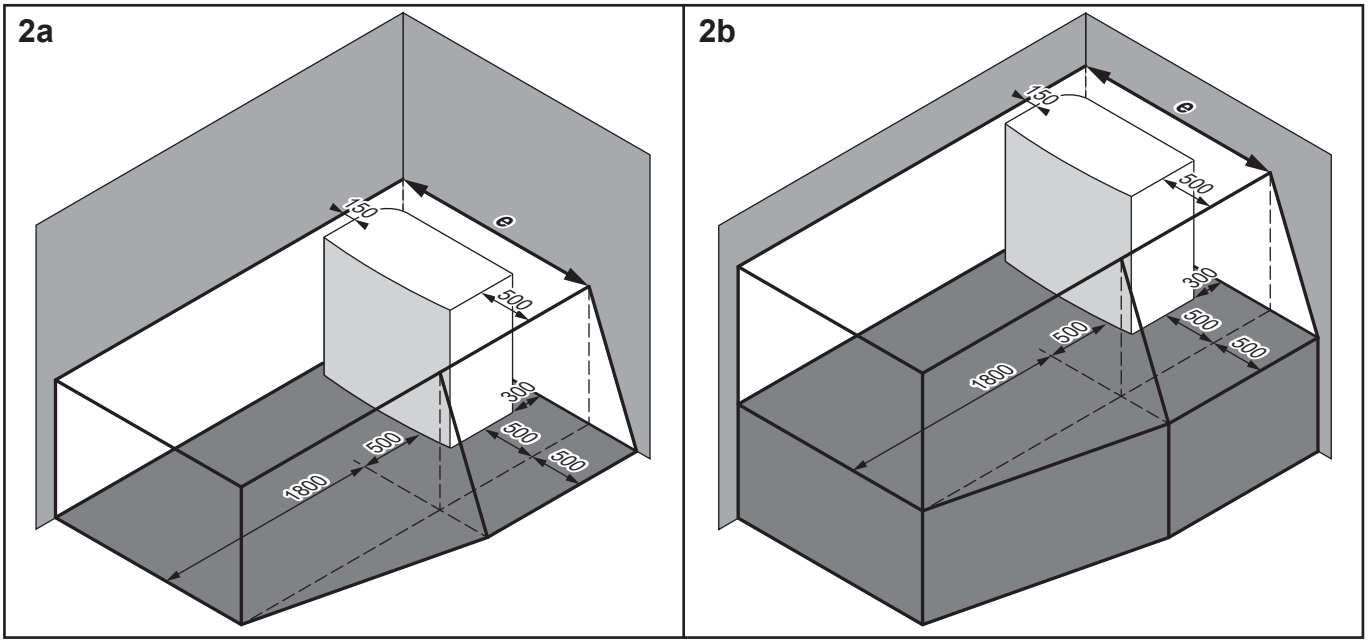

	a	b	c	d	e
EPSKS04~07A*	535	1215	2215	3215	1815
EPSK06~14A*	604	1330	2330	3330	1980

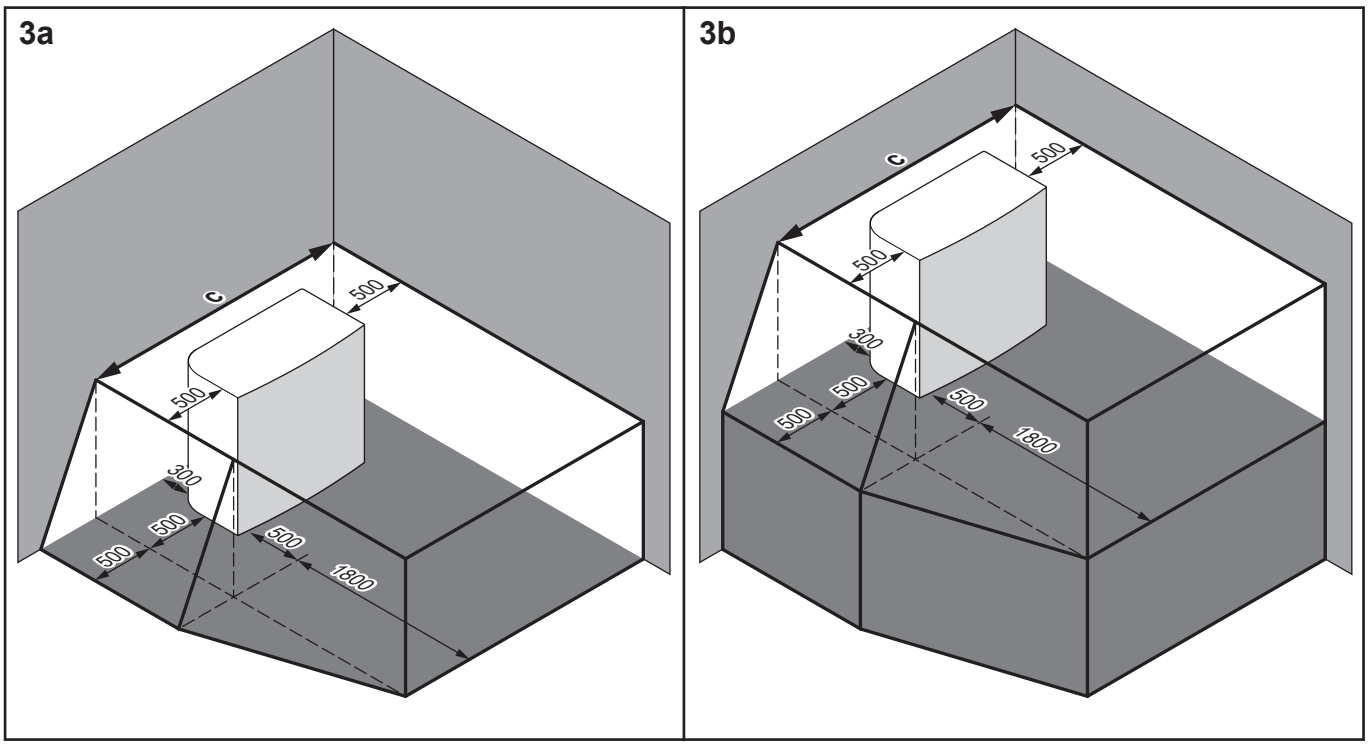

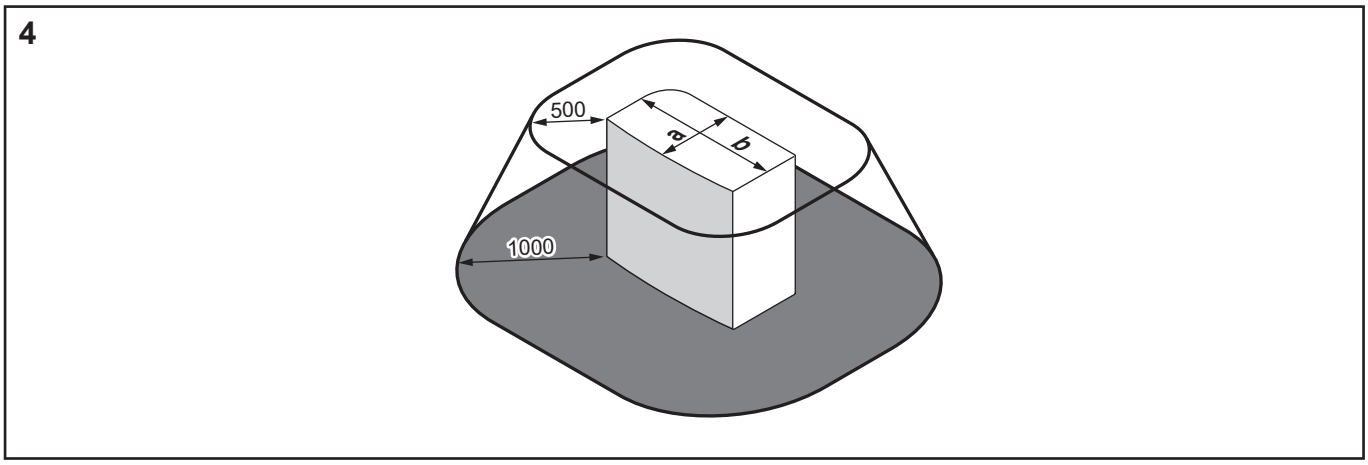

	a	b	c
EPSKS04~07A*	535	1215	2215
EPSK06~14A*	604	1330	2330

The symbols can be interpreted as follows:

General	The outdoor unit contains R290 refrigerant, which belongs to "Safety class A3" as defined in ISO817 and used in EN378. This means that you must comply with extra installation site requirements (= "protective zone") to ensure safety in the unlikely event of a refrigerant leak. **Required for the protective zone:** ▪ No openings into habitable areas of the building. **Example:** openable windows, doors, ventilation openings, or basement entrances. ▪ No ignition sources (neither permanently nor for a short period of time). **Example:** - Open flames - Electrical installations, sockets, lamps, light switches - Electrical house connections - Sparking tools - Objects with high surface temperatures (>360°C for R290) ▪ The protective zone must NOT extend to adjacent buildings or public traffic areas. ▪ Other units may only be installed in your unit's protective zone if they are of the same type (i.e. EPSK). So, units of a different type, using a different refrigerant, or from another manufacturer are NOT allowed in your unit's protective zone. The combined protective zone of all units is then the addition of all individual protective zones. **NOT required for the protective zone:** ▪ Complete open area in front of the unit.
1a / 1b	Protective zone in front of a building: ▪ **1a**: on floor ▪ **1b**: elevated
2a / 2b	Protective zone for right corner installation: ▪ **2a**: on floor ▪ **2b**: elevated
3a / 3b	Protective zone for left corner installation: ▪ **3a**: on floor ▪ **3b**: elevated
4	Protective zone for on-roof installation. **Extra requirement:** No ventilation or skylight openings in the protective zone.

16.3 Piping diagram: Outdoor unit

In case of EPSKS04~07A*:

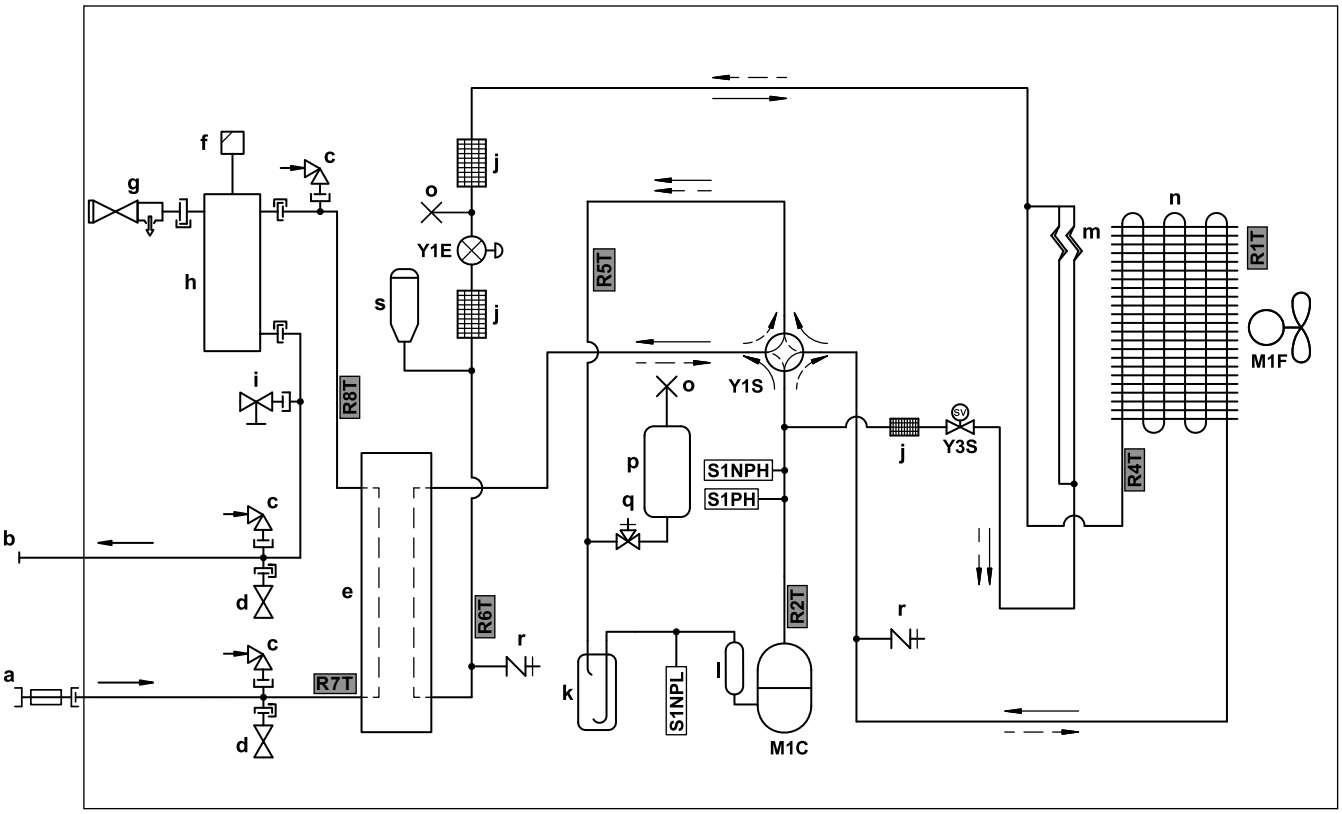

3D157908 B

a	Water IN (Ball valve with integrated check valve and filter)
b	Water OUT (screw connection, male, 1")
c	Vacuum breaker
d	Freeze protection valve
e	Plate heat exchanger
f	Automatic air purge valve
g	Pressure relief valve
h	Gas separator
i	Drain valve
j	Filter
k	Accumulator
l	Muffler
m	Capillary tube
n	Air heat exchanger
o	Pinched pipe
p	Refrigerant vessel
q	Stop valve
r	Service port 5/16" flare
s	Liquid Receiver

Refrigerant flow:

→ Heating

--→ Cooling

M1C	Compressor
M1F	Fan motor
S1PH	High pressure switch
S1NPH	High pressure sensor
S1NPL	Low pressure sensor
Y1E	Electronic expansion valve (main)
Y1S	Solenoid valve (4-way valve)
Y3S	Solenoid valve (hot gas bypass)

Thermistors:

R1T	Outdoor air
R2T	Compressor discharge
R4T	Air heat exchanger
R5T	4-way valve suction
R6T	Refrigerant liquid
R7T	Water inlet
R8T	Water outlet

In case of EPSK06~10A*:

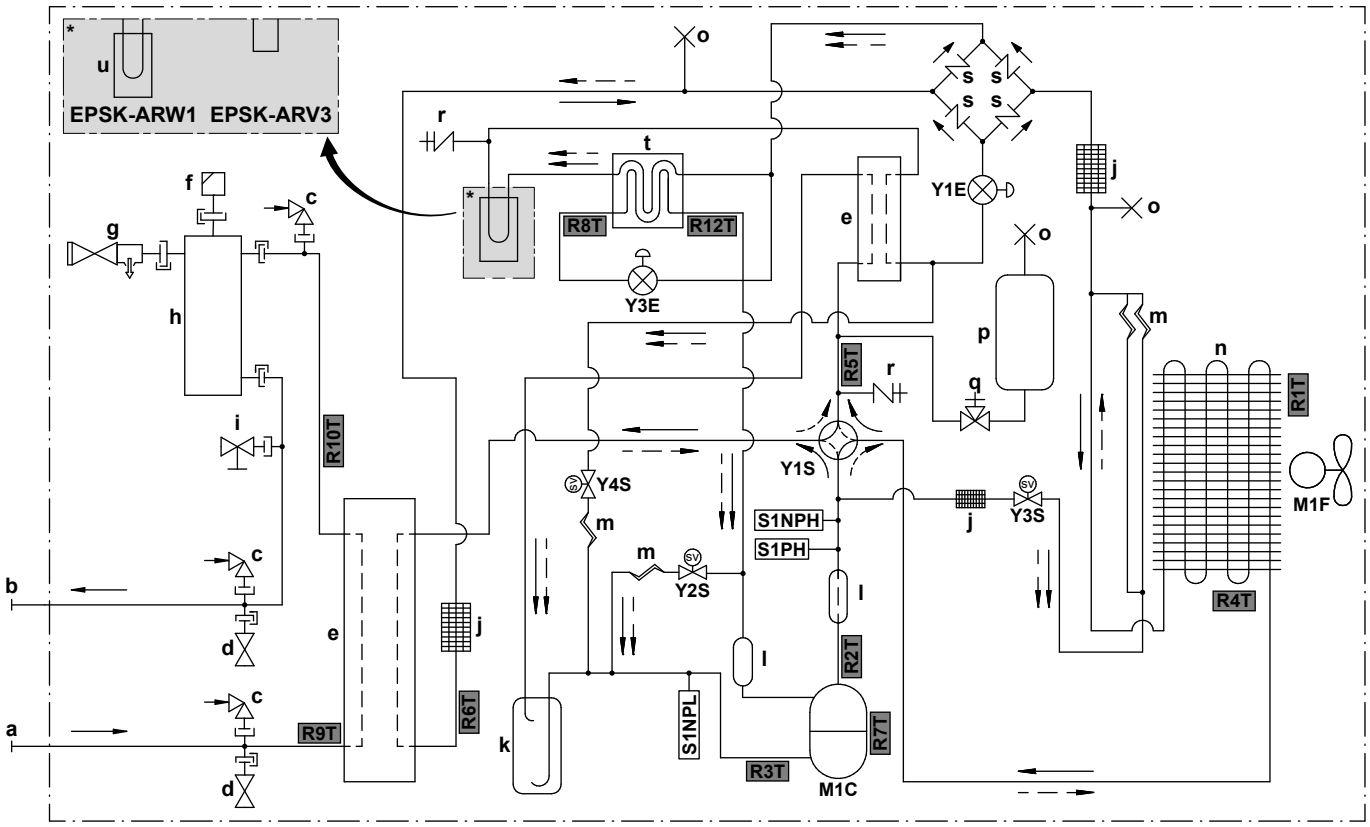

3D150154B

a	Water IN (screw connection, male, 1 1/4")
b	Water OUT (screw connection, male, 1 1/4")
c	Vacuum breaker
d	Freeze protection valve
e	Plate heat exchanger
f	Automatic air purge valve
g	Pressure relief valve
h	Gas separator
i	Drain valve
j	Filter
k	Accumulator
l	Muffler
m	Capillary tube
n	Air heat exchanger
o	Pinched pipe
p	Refrigerant vessel
q	Stop valve
r	Service port 5/16" flare
s	One-way valve
t	Economiser
u	PCB cooling

Refrigerant flow:

→	Heating
⇢	Cooling

M1C	Compressor
M1F	Fan motor
S1PH	High pressure switch
S1NPH	High pressure sensor
S1NPL	Low pressure sensor
Y1E	Electronic expansion valve (main)
Y3E	Electronic expansion valve (injection)
Y1S	Solenoid valve (4-way valve)
Y2S	Solenoid valve (low pressure bypass)
Y3S	Solenoid valve (hot gas bypass)
Y4S	Solenoid valve (liquid injection)

Thermistors:

R1T	Outdoor air
R2T	Compressor discharge
R3T	Compressor suction
R4T	Air heat exchanger
R5T	4-way valve suction
R6T	Refrigerant liquid
R7T	Compressor shell
R8T	Injection before economiser
R9T	Water IN
R10T	Water OUT
R12T	Injection after economiser

16.4 Piping diagram: Indoor unit

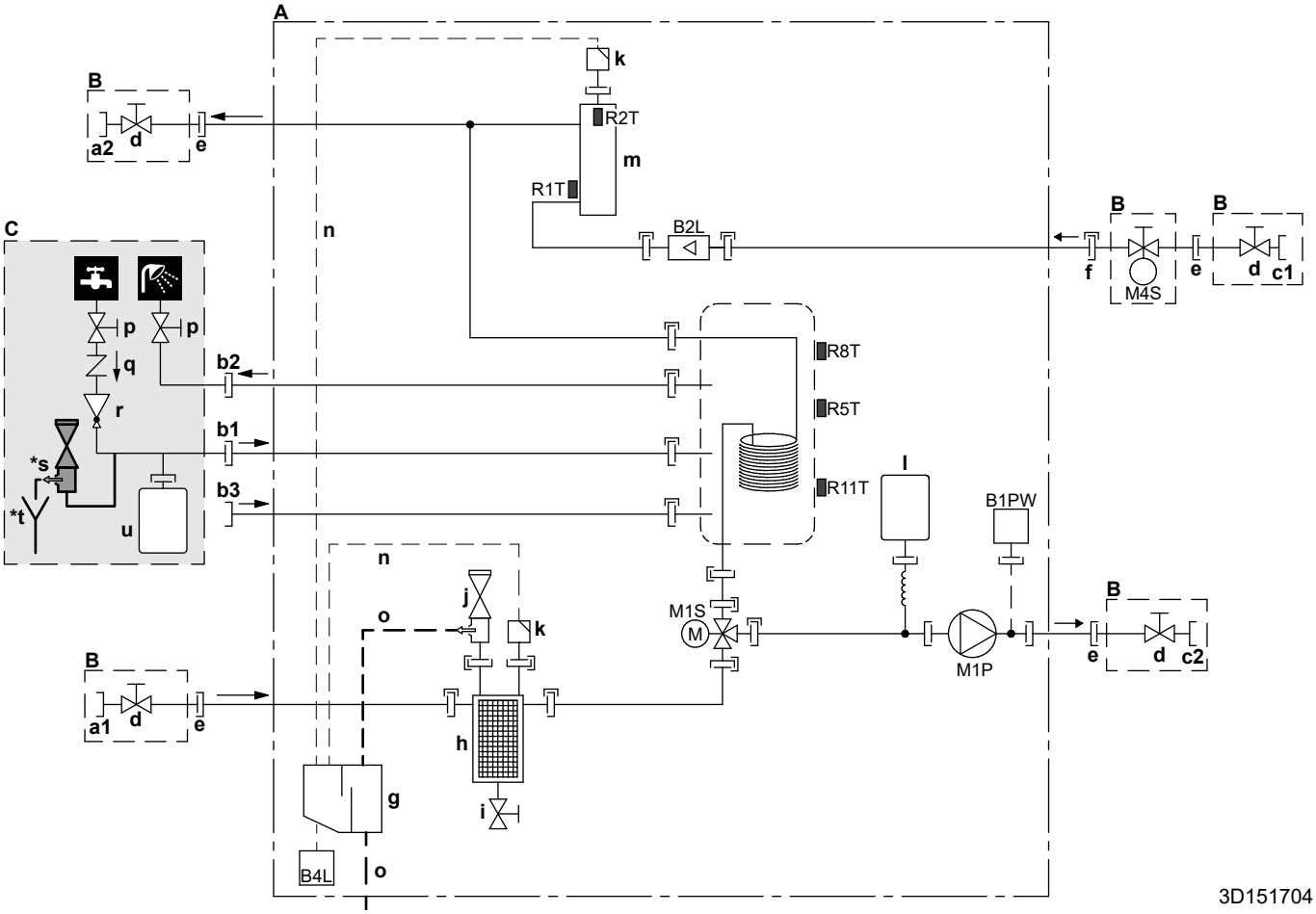

A Indoor unit
B Field installed (delivered as accessory)
C Field supplied
a1 Space heating/cooling – Water IN (screw connection, female)
- EPVX07: 1"
- EPVX10+14: 1 1/4"

a2 Space heating/cooling – Water OUT (screw connection, female)
- EPVX07: 1"
- EPVX10+14: 1 1/4"

b1 DHW – Cold water IN (screw connection, 3/4")
b2 DHW – Hot water OUT (screw connection, 3/4")
b3 Recirculation connection (female, 3/4")
c1 Water IN from outdoor unit (screw connection, female)
- EPVX07: 1"
- EPVX10+14: 1 1/4"

c2 Water OUT to outdoor unit (screw connection, female)
- EPVX07: 1"
- EPVX10+14: 1 1/4"

d Shut-off valve
- EPVX07: male 1" – female 1"
- EPVX10+14: male 1" – female 1 1/4"

e Screw connection, 1"
f Quick coupling
g Gas separator
h Magnetic filter/dirt separator
i Drain valve
j Safety valve
k Air purge
l Expansion vessel
m Backup heater
n Hose for air purge
o Drain hose for water

p	Shut-off valve (recommended)
q	Non-return valve (recommended)
r	Pressure reducing valve (recommended)
***s**	Pressure relief valve (max. 10 bar (=1.0 MPa))(mandatory)
***t**	Tundish (mandatory)
u	Expansion vessel (recommended)
B1PW	Space heating water pressure sensor
B2L	Flow sensor
B4L	Gas sensor
M1P	Pump
M1S	3-way valve (space heating/domestic hot water)
M4S	Normally closed shut-off valve (inlet leak stop)(quick coupling – female 1")

Thermistors:

R1T	Inlet water
R2T	Backup heater – Water OUT
R5T, R8T, R11T	Tank

Connections:

	Screw connection
	Flare connection
	Quick coupling
	Brazed connection

16.5 Wiring diagram: Outdoor unit

The wiring diagram (only needed for servicing purposes, not for installation) is delivered with the unit:

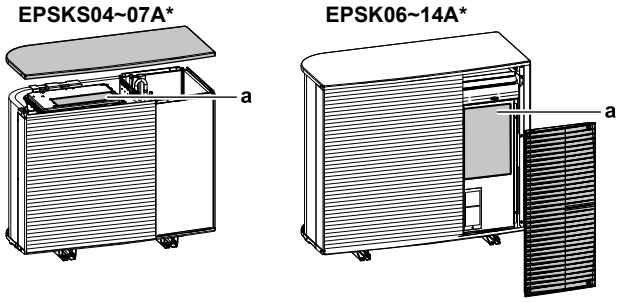

a Wiring diagram

English	Translation
Back side view	Back side view
Electronic component assembly	Electronic component assembly
Indoor	Indoor
Outdoor	Outdoor
Position of compressor terminal	Position of compressor terminal
Position of elements	Position of elements
See note ***	See note ***
Service/Dchecker	Service / D-checker
Top side view	Top side view

Notes:

1	Symbols:	
	L	Live
	N	Neutral
	⏚	Protective earth
	⏚	Noiseless earth
	▭▭▭	Terminal strip
	-o-	Terminal
	▭	Connector
	-●-	Connection
	▮▮▮	Field wiring
	=:=	Option

2	Colours:	
	BLK	Black
	RED	Red
	BLU	Blue
	WHT	White
	GRN	Green
	YLW	Yellow
	PNK	Pink
	ORG	Orange
	GRY	Grey
	BRN	Brown
3	This wiring diagram applies only to the outdoor unit.	
4	When operating, do not short-circuit protective device S1PH.	
5	Refer to the combination table and the option manual for how to connect the wiring to X2M.	

Legend in case of V3 models (1N~):

A1P	Printed circuit board (main)
A3P	Printed circuit board (leakage current)
A4P	Printed circuit board (ACS)
E1H	Drain tube heater (field supply)
E1HC	Crank case heater
F1U	Field fuse (field supply)
F10U (A1P)	Fuse (T 6.3 A / 250 V)
H1P (A1P)	Light-emitting diode (service monitor is orange)
HAP (A1P, A4P)	Light-emitting diode (service monitor is green)
K2R (A1P)	Magnetic relay (Y3S)
K3R (A1P)	Magnetic relay (Y2S)
M1C	Compressor motor
M1F	Fan motor
Q1DI	Earth leakage circuit breaker (30 mA) (field supply)
R1T	Thermistor (outdoor air)
R2T	Thermistor (compressor discharge)
R3T	Thermistor (compressor suction)
R4T	Thermistor (air heat exchanger)
R5T	Thermistor (4-way valve suction)
R6T	Thermistor (refrigerant liquid)
R7T	Thermistor (compressor shell)
R8T	Thermistor (injection before economiser)

R9T	Thermistor (water IN)
R10T	Thermistor (water OUT)
R12T	Thermistor (injection after economiser)
S1NG	Gas sensor
S1NPH	High pressure sensor
S1NPL	Low pressure sensor
S1PH	High pressure switch
T1A	Current transformer
X*A, X*Y	Connectors
X*M	Terminal strip
Y1E	Electronic expansion valve (main)
Y3E	Electronic expansion valve (injection)
Y1S	Solenoid valve (4-way valve)
Y2S	Solenoid valve (low pressure bypass)
Y3S	Solenoid valve (hot gas bypass)
Y4S	Solenoid valve (liquid injection)
Z*C	Noise filter (ferrite core)

Legend in case of W1 models (3N~):

A1P	Printed circuit board (main)
A2P	Printed circuit board (net filter)
A3P	Printed circuit board (leakage current)
A4P	Printed circuit board (ACS)
E1H	Drain tube heater (field supply)
E1HC	Crank case heater
F1U	Field fuse (field supply)
FINTh	Thermistor (fin)
HAP (A1P, A4P)	Light-emitting diode (service monitor is green)
K2R (A1P)	Magnetic relay (Y2S)
K3R (A1P)	Magnetic relay (Y3S)
M1C	Compressor motor
M1F	Fan motor
Q1DI	Earth leakage circuit breaker (30 mA) (field supply)
R1T	Thermistor (outdoor air)
R2T	Thermistor (compressor discharge)
R3T	Thermistor (compressor suction)
R4T	Thermistor (air heat exchanger)
R5T	Thermistor (4-way valve suction)
R6T	Thermistor (refrigerant liquid)

R7T	Thermistor (compressor shell)
R8T	Thermistor (injection before economiser)
R9T	Thermistor (water IN)
R10T	Thermistor (water OUT)
R11T	Thermistor (heat pipe)
R12T	Thermistor (injection after economiser)
S1NG	Gas sensor
S1NPH	High pressure sensor
S1NPL	Low pressure sensor
S1PH	High pressure switch
T1A	Current transformer
X*M	Terminal strip
X*Y	Connectors
Y1E	Electronic expansion valve (main)
Y3E	Electronic expansion valve (injection)
Y1S	Solenoid valve (4-way valve)
Y2S	Solenoid valve (low pressure bypass)
Y3S	Solenoid valve (hot gas bypass)
Y4S	Solenoid valve (liquid injection)
Z*C	Noise filter (ferrite core)

16.6 Wiring diagram: Indoor unit

See the internal wiring diagram supplied with the unit (on the inside of the indoor unit switch box cover). The abbreviations used are listed below. There are checkboxes for each `Field IO` connection on the internal wiring diagram. It is recommended to mark the checkbox for the selected standard option after wiring.

Checkboxes internal wiring diagram: Example

This example shows how to mark a checkbox on the internal wiring diagram.

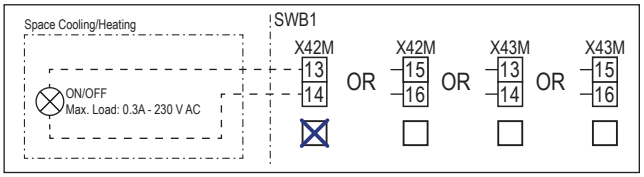

Notes to go through before starting the unit

English	Translation
Notes to go through before starting the unit	Notes to go through before starting the unit
X2M	Main terminal – Outdoor unit
X40M	Main terminal – Indoor unit
X41M	Main terminal – Backup heater
X42M	Field wiring for high voltage
X44M, X45M	Field wiring for SELV (Safety Extra Low Voltage)
—·—·—·—	Earth wiring
- - - - - - -	Field supply
①	Several wiring possibilities
	Option
	Not mounted in switch box
	Wiring depending on model
	PCB
Note 1: Connection point of the power supply for the BUH should be foreseen outside the unit.	Note 1: Connection point of the power supply for the backup heater should be foreseen outside the unit.
Backup heater power supply	Backup heater power supply
☐ 4.5 kW (1N~, 230 V)	☐ 4.5 kW (1N~, 230 V)
☐ 4.5 kW (3N~, 400 V)	☐ 4.5 kW (3N~, 400 V)
☐ 4.5 kW (3~, 230 V)	☐ 4.5 kW (3~, 230 V)
☐ 4.5 kW (2~, 230 V)	☐ 4.5 kW (2~, 230 V)
☐ 6 kW (1N~, 230 V)	☐ 6 kW (1N~, 230 V)
☐ 9 kW (3N~, 400 V)	☐ 9 kW (3N~, 400 V)
User installed options	User installed options
☐ Remote user interface	☐ Dedicated Human Comfort Interface (BRC1HHDA used as room thermostat)

English	Translation
☐ Ext. indoor thermistor	☐ External indoor thermistor
☐ Ext outdoor thermistor	☐ External outdoor thermistor
☐ Safety thermostat	☐ Safety thermostat
☐ Smart Grid	☐ Smart Grid
☐ WLAN cartridge	☐ WLAN cartridge
☐ Bizone mixing kit	☐ Bizone mixing kit
Main LWT	Main leaving water temperature
☐ On/OFF thermostat (wired)	☐ ON/OFF thermostat (wired)
☐ On/OFF thermostat (wireless)	☐ ON/OFF thermostat (wireless)
☐ Ext. thermistor	☐ External thermistor
☐ Heat pump convector	☐ Heat pump convector
Add LWT	Additional leaving water temperature
☐ On/OFF thermostat (wired)	☐ ON/OFF thermostat (wired)
☐ On/OFF thermostat (wireless)	☐ ON/OFF thermostat (wireless)
☐ Ext. thermistor	☐ External thermistor
☐ Heat pump convector	☐ Heat pump convector

Position in switch box

English	Translation
Position in switch box	Position in switch box

Legend

A1P		Hydro PCB
A2P	*	ON/OFF thermostat (PC=power circuit)
A3P	*	Heat pump convector
A5P		Power supply PCB
A6P		Multistep backup heater PCB
A11P		Interface PCB
A12P		User interface PCB
A14P	*	PCB of the dedicated Human Comfort Interface (BRC1HHDA used as room thermostat)
A15P	*	Receiver PCB (wireless ON/OFF thermostat)
A30P	*	Bizone mixing kit PCB
F1B	#	Overcurrent fuse - Backup heater
F2B	#	Overcurrent fuse - Main
K1A, K2A	*	High voltage Smart Grid relay
M2P	#	Domestic hot water pump
M2S	#	2-way valve for cooling mode
M4S		Normally closed shut-off valve (inlet leak stop)

P* (A14P)	*	Terminal
PC (A15P)	*	Power circuit
Q*DI	#	Earth leakage circuit breaker
Q1L		Thermal protector backup heater
Q4L	#	Safety thermostat
R1H (A2P)	*	Humidity sensor
R1T (A2P)	*	Ambient sensor ON/OFF thermostat
R1T (A14P)	*	Ambient sensor user interface
R1T (A15P)	*	Ambient sensor user interface
R2T (A2P)	*	External sensor (floor or ambient)
R6T	*	External indoor or outdoor ambient thermistor
S1S	#	Preferential kWh rate power supply contact
S2S	#	Electricity meter pulse input 1
S3S	#	Electricity meter pulse input 2
S4S	#	Smart Grid feed-in (Smart Grid photovoltaic power pulse meter)
S10S-S11S	#	Low voltage Smart Grid contact
ST6 (A30P)	*	Connector
X*A, X*Y, X*Y*		Connector
X*M		Terminal strip

* Optional
\# Field supply

Translation of text on wiring diagram

English	Translation
(1) Main power connection	(1) Main power connection
2-pole fuse	2-pole fuse
Indoor unit supplied from outdoor	Indoor unit supplied from outdoor
Indoor unit supplied separately	Indoor unit supplied separately
Normal kWh rate power supply	Normal kWh rate power supply
Outdoor unit	Outdoor unit
Standard	Standard
SWB	Switch box
(2) Backup heater power supply	(2) Backup heater power supply
2-pole fuse	2-pole fuse
4-pole fuse	4-pole fuse
For these connections use the optional adapter wire harnesses.	For these connections use the optional adapter wire harnesses.
Only for 4.5 kW MBUH units	Only for 4.5 kW multistep backup heater units

English	Translation
Only for 9 kW MBUH units	Only for 9 kW multistep backup heater units
(3) User interface	(3) User interface
3rd generation WLAN cartridge	Third generation WLAN cartridge
OR	OR
Remote user interface	Dedicated Human Comfort Interface (BRC1HHDA used as room thermostat)
SD card	Card slot for WLAN cartridge
Voltage	Voltage
(4) Shut-off valve - Inlet leak stop	(4) Normally closed shut-off valve (inlet leak stop)
(5) Ext. thermistor	(5) External thermistor
External ambient sensor option (indoor or outdoor)	External ambient sensor option (indoor or outdoor)
Voltage	Voltage
(6) Field supplied options	(6) Field supplied options
230 V AC Control Device	230 V AC Control Device
Alarm output	Alarm output
Bizone mixing kit	Bizone mixing kit
Contact rating	Contact rating
Continuous	Continuous current
DHW pump output	Domestic hot water pump output
DHW pump	Domestic hot water pump
Electric pulse meter input	Electricity meter
Ext. heat source	External heat source
For HV Smart Grid	For high voltage Smart Grid
For LV Smart Grid	For low voltage Smart Grid
Inrush	Inrush current
Max. load	Maximum load
ON/OFF output	ON/OFF output
Preferential kWh rate power supply contact	Preferential kWh rate power supply contact
Safety thermostat contact	Safety thermostat contact
Shut-off valve NC	Shut-off valve – Normally closed
Shut-off valve NO	Shut-off valve – Normally open
Smart Grid PV power pulse meter	Smart Grid photovoltaic power pulse meter
Space cooling/heating	Space cooling/heating
Voltage	Voltage

English	Translation
(7) External On/OFF thermostats and heat pump convector	(7) External ON/OFF thermostats and heat pump convector
Additional LWT zone	Additional leaving water temperature zone
For external sensor (floor or ambient)	For external sensor (floor or ambient)
For heat pump convector	For heat pump convector
For wired On/OFF thermostat	For wired ON/OFF thermostat
For wireless On/OFF thermostat	For wireless ON/OFF thermostat
Main LWT zone	Main leaving water temperature zone
Max. load	Maximum load

Electrical connection diagram

Note: In case of signal cable: keep minimum distance to power cables >5 cm

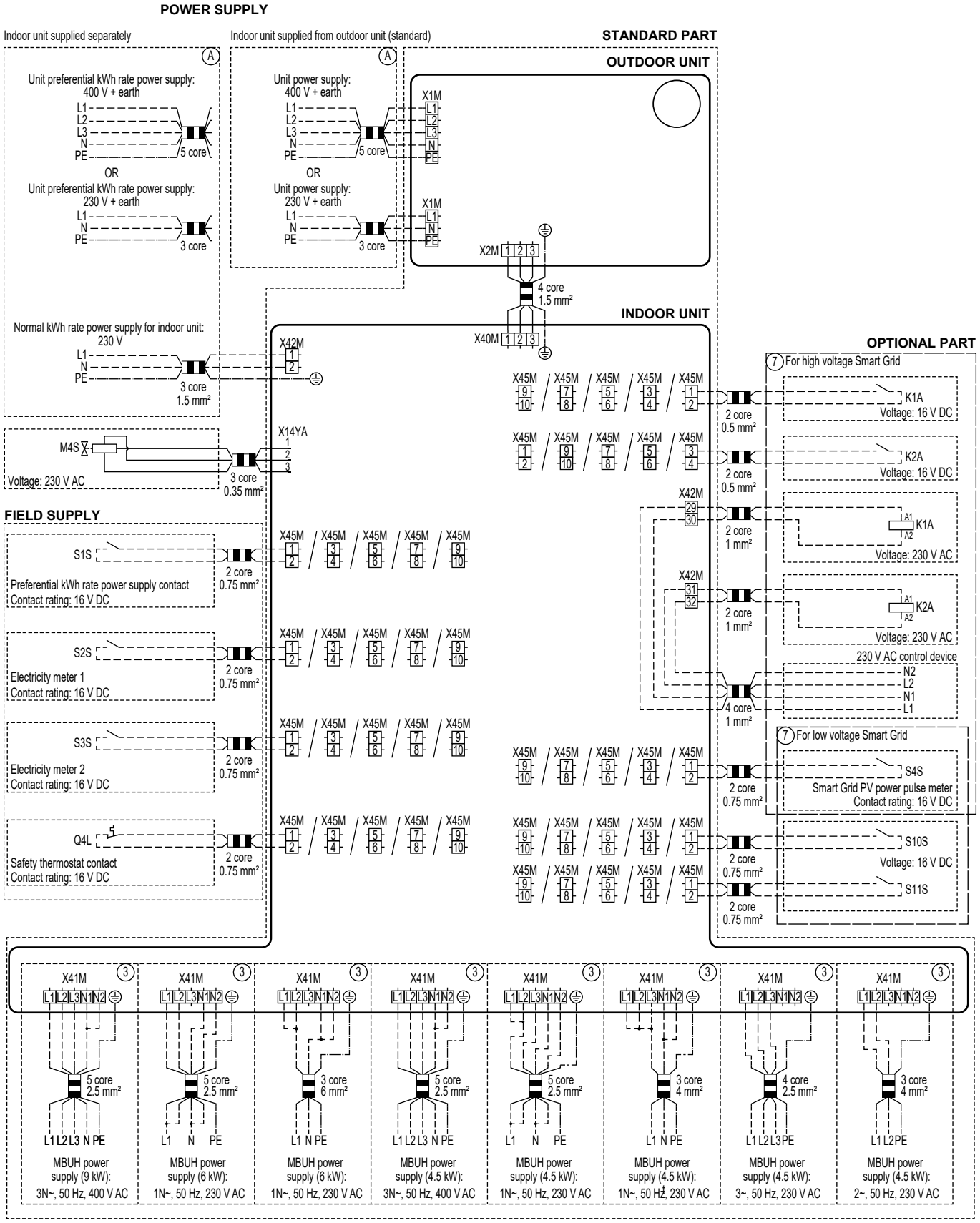

4D152933B (1/2)

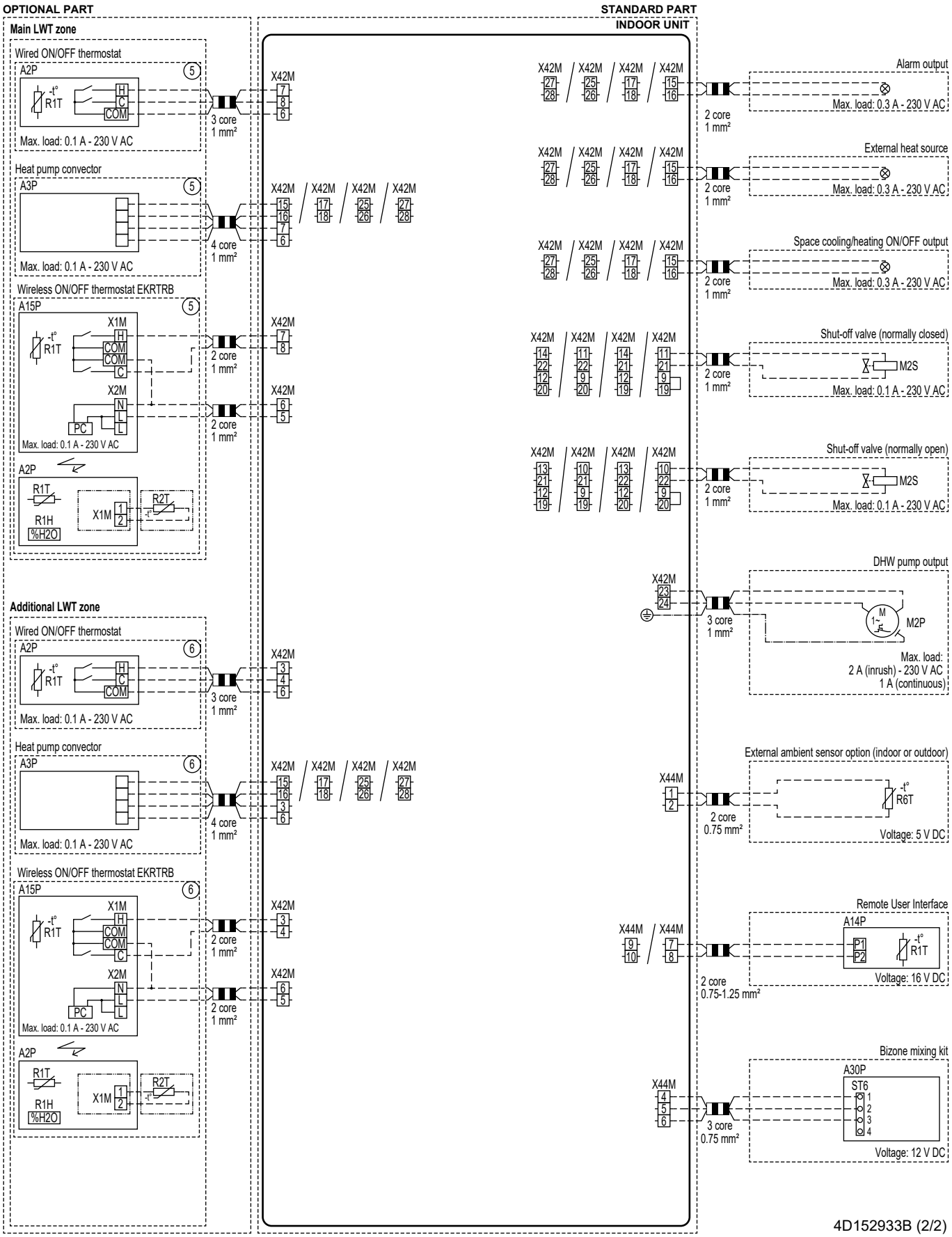
OPTIONAL PART
STANDARD PART
INDOOR UNIT
Main LWT zone
Wired ON/OFF thermostat
A2P
R1T
H
C
COM
Max. load: 0.1 A - 230 V AC
3 core
1 mm²
X42M
Heat pump convector
A3P
4 core
1 mm²
Wireless ON/OFF thermostat EKRTRB
A15P
X1M
X2M
PC
2 core
1 mm²
R1H
%H2O
R2T
Additional LWT zone
Alarm output
External heat source
Space cooling/heating ON/OFF output
Shut-off valve (normally closed)
Shut-off valve (normally open)
M2S
DHW pump output
M2P
Max. load:
2 A (inrush) - 230 V AC
1 A (continuous)
External ambient sensor option (indoor or outdoor)
X44M
R6T
2 core
0.75 mm²
Voltage: 5 V DC
Remote User Interface
A14P
P1
P2
2 core
0.75-1.25 mm²
Voltage: 16 V DC
Bizone mixing kit
A30P
ST6
3 core
0.75 mm²
Voltage: 12 V DC
4D152933B (2/2)

16.7 Technical specifications: Domestic hot water tank

16.7.1 Test results in accordance with EN12897 (2016)

INFORMATION

This unit has been tested and approved according to BS EN12897:2016

Description	Hot water capacity	Reheat time
EPVX07SU18AJ4V	175 l	17 min 14 sec
EPVX07SU23AJ4V	207 l	22 min 00 sec
EPVX10SU18AJ4V	175 l	17 min 14 sec
EPVX10SU23AJ4V	207 l	22 min 00 sec
EPVX14SU18AJ4V	175 l	17 min 14 sec
EPVX14SU23AJ4V	207 l	22 min 00 sec

16.7.2 Warning label

WARNING TO USER

- Do not remove or adjust any component part of this installation. Contact the installer.
- Should the system develop a fault, switch the system off and contact the installer.

WARNING TO INSTALLER

- This installation is subject to building regulation approval, notify Local Authority of intention to install.
- Use only manufacturer's recommended spare parts. Contact your local Daikin dealer.
- Installed by

  name .....

  address .....

  tel. No. .....

  completion date .....

TECHNICAL SPECIFICATIONS EN12897: 2016

- Maximum water supply pressure to pressure reducing valve: **12 bar**
- Operating pressure/set pressure of pressure reducing valve: **3.5 bar**
- Maximum primary working pressure (heating): **2.5 bar**
- Maximum flow temperature: **65 °C**
- Expansion vessel pre-charge pressure: **3.5 bar**
- Expansion valve setting: **8 bar**
- Temperature and pressure relief valve replacement part No.: **302810P**
- Operating pressure of temperature and pressure relief valve: **10 bar**
- Operating temperature of temperature and pressure relief valve: **95 °C**
- Operating temperature of thermal cut-out (2 pieces): **89 °C**
- Primary heating power input:

  EPVX07SU18AJ4V, EPVX10SU18AJ4V, EPVX14SU18AJ4V **33 kW**

  EPVX07SU23AJ4V, EPVX10SU23AJ4V, EPVX14SU23AJ4V **32 kW**
- Primary flow rate to reach primary heating power input: **15 l/min**
- Standing heat loss:

  EPVX07SU18AJ4V, EPVX10SU18AJ4V, EPVX14SU18AJ4V **1.35 kWh/24h**

  EPVX07SU23AJ4V, EPVX10SU23AJ4V, EPVX14SU23AJ4V **1.76 kWh/24h**
- Model

Model	storage capacity	mass of unit when full
EPVX07SU18AJ4V	182 l	291 kg
EPVX07SU23AJ4V	221 l	347 kg
EPVX10SU18AJ4V	182 l	291 kg
EPVX10SU23AJ4V	221 l	347 kg
EPVX14SU18AJ4V	182 l	291 kg
EPVX14SU23AJ4V	221 l	347 kg

- Maximum design pressure: **10 bar**
- Rated volume heat exchanger: **9.1 l**

DAIKIN EUROPE N.V.

4P784241-1B

16.8 ESP curve: Indoor unit

Note: A flow error will occur when the minimum water flow rate is not reached.

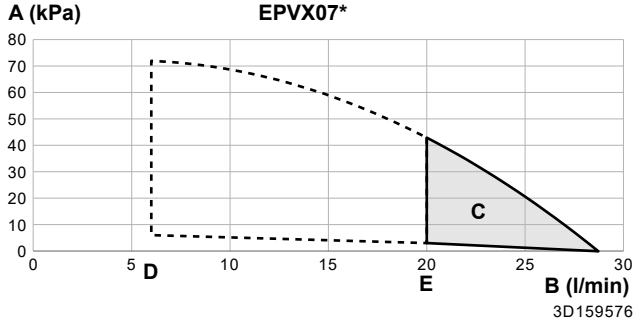

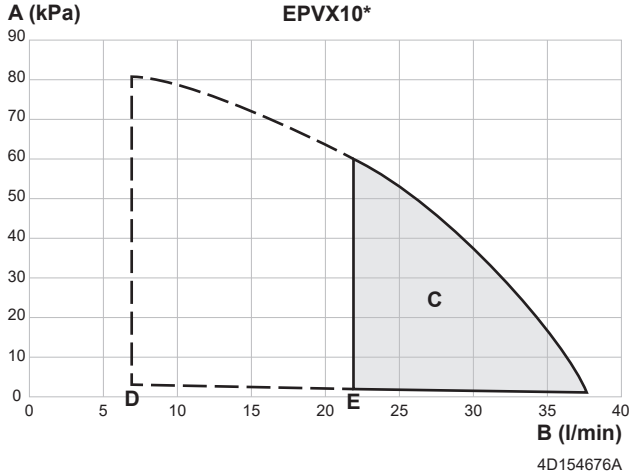

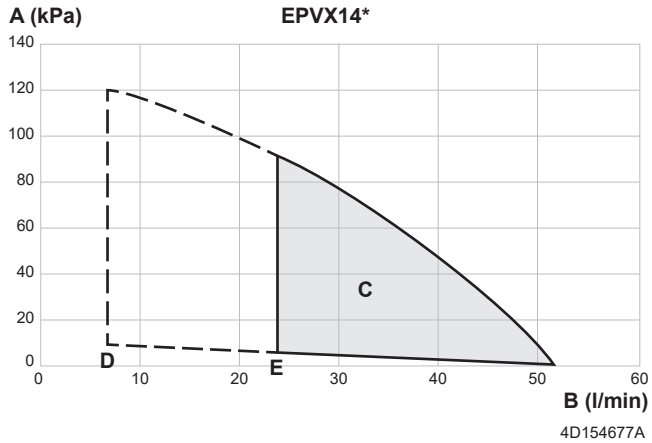

- **A** External static pressure in the space heating/cooling circuit
- **B** Water flow rate through the unit in the space heating/cooling circuit
- **C** Operation range
  Note: Operation range is extended to lower flow rates only in case the unit operates with heat pump only (see dashed lines).
- **D** Minimum water flow rate during normal operation
- **E** Minimum water flow rate during defrost/backup heater operation

Notes:

- Selecting a flow outside the operating area can damage the unit or cause the unit to malfunction. See also the minimum and maximum allowed water flow range in the technical specifications.
- Make sure water quality complies with EU directive 2020/2184.
- Unit "External static pressure" includes the shut-off valve

17 Glossary

Dealer
Sales distributor for the product.

Authorised installer
Technical skilled person who is qualified to install the product.

User
Person who is owner of the product and/or operates the product.

Applicable legislation
All international, European, national and local directives, laws, regulations and/or codes that are relevant and applicable for a certain product or domain.

Service company
Qualified company which can perform or coordinate the required service to the product.

Installation manual
Instruction manual specified for a certain product or application, explaining how to install, configure and maintain it.

Operation manual
Instruction manual specified for a certain product or application, explaining how to operate it.

Maintenance instructions
Instruction manual specified for a certain product or application, which explains (if relevant) how to install, configure, operate and/or maintain the product or application.

Accessories
Labels, manuals, information sheets and equipment that are delivered with the product and that need to be installed according to the instructions in the accompanying documentation.

Optional equipment
Equipment made or approved by Daikin that can be combined with the product according to the instructions in the accompanying documentation.

Field supply
Equipment NOT made by Daikin that can be combined with the product according to the instructions in the accompanying documentation.

Field settings table

Applicable indoor units

EPBX(U)07A▲4V▼
EPBX(U)10A▲4V▼
EPBX14A▲4V▼

EPBX10A▲9W▼
EPBX(U)14A▲9W▼

EPVX07S(U)18A▲4V▼
EPVX07S(U)23A▲4V▼
EPVX10S(U)18A▲4V▼
EPVX10S(U)23A▲4V▼
EPVX14S(U)18A▲4V▼
EPVX14S(U)23A▲4V▼

EPVX07S23A▲9W▼
EPVX10S18A▲9W▼
EPVX10S23A▲9W▼
EPVX14S18A▲9W▼
EPVX14S23A▲9W▼

EPSX07P30A▲▼
EPSX07P50A▲▼
EPSX10P30A▲▼
EPSX10P50A▲▼
EPSX14P30A▲▼
EPSX14P50A▲▼

EPSXB07P30A▲▼
EPSXB07P50A▲▼
EPSXB10P30A▲▼
EPSXB10P50A▲▼
EPSXB14P30A▲▼
EPSXB14P50A▲▼

Notes

(*1) *4V*
(*2) *9W*
(*3) EPB*
(*4) EPV*
(*5) EPSX*
(*6) EPSXB*
(*7) *SU*

▲ = 1, 2, 3, …, 9, A, B, C, …, Z
▼ = , , 1, 2, 3, …, 9

Field settings table						Installer setting at variance with default value	
Breadcrumb	Setting type	code	Setting description	Applicable when	Range / step / **default value**	Date	Value
1 Main zone							
1.1	End user	N/A	Room temperature target during space cooling in the main zone.	[041]=2: Room	12~35°C step: 0.5°C **20**		
1.1	End user	N/A	Room temperature target during space heating in the main zone.	[041]=2: Room	12~30°C step: 0.5°C **21**		
1.2	End user	N/A	Enable the room temperature target schedule for space heating in the main zone.	[041]=2: Room	**0: Manual mode** 1: Schedule mode		
1.2	End user	N/A	Enable the leaving water target schedule without weather-dependent curve for space heating in the main zone.	[041]=0: Leaving water	**0: Manual mode** 1: Schedule mode		
1.3	End user	N/A	Heating schedule.	[041]=2: Room OR [041]=0: Leaving water	N/A		
1.4	End user	N/A	Cooling schedule.	[041]=2: Room OR [041]=0: Leaving water	N/A		
1.5	Adv. end user	N/A	Leaving water control mode during space heating in the main zone.	Always	**0: Fixed** 1: Weather-dependent		
1.6	Installer	[053]	Upper limit of the leaving water temperature target during space heating in the main zone.	Always	[099]=1: Yes AND [1.11]=2: Radiator [054]~min([048]-5; [060]; 75) step: 1°C **35°C** [099]=1: Yes AND [1.11]≠2: Radiator [054]~min([048]-5; [060]; 55) step: 1°C **35°C** [099]=0: No AND [1.11]=2: Radiator [054]~min([015]-5; [060]; 75) step: 1°C **75°C** [099]=0: No AND [1.11]≠2: Radiator [054]~min([015]-5; [060]; 55) step: 1°C **55°C**		
1.6	Installer	[054]	Lower limit of the leaving water temperature target during space heating in the main zone.	Always	15~[053]°C step: 1°C **20**		
1.6	Installer	[055]	Upper limit of the leaving water temperature target during space cooling in the main zone.	Always	[056]~22°C step: 1°C **22**		
1.6	Installer	[056]	Lower limit of the leaving water temperature target during space cooling in the main zone.	Always	[099]=1: Yes ([049]+4)~[055] step: 1°C **7°C** [099]=0: No ([014]+4)~[055] step: 1°C **7°C**		
1.7	Adv. end user	N/A	Leaving water control mode during space cooling in the main zone.	Always	**0: Fixed** 1: Weather-dependent		
1.8	End user	N/A	Leaving water temperature weather-dependent curve for space heating in the main zone.	[1.5]=1: Weather-dependent	Ambient range: -40~25°C step: 1°C Leaving water temperature range: [054]~[053]°C step: 1°C		
1.9	End user	N/A	Leaving water temperature weather-dependent curve for space cooling in the main zone.	[1.7]=1: Weather-dependent	Ambient range: 10~43°C step: 1°C Leaving water temperature range: [056]~[055]°C step: 1°C		
1.10	End user	N/A	Hysteresis on the room target temperature used to restart the request for heating or space cooling.	[041]=2: Room	0.5~10°C step: 0.1°C **0.5**		
1.11	End user	N/A	Heat emitter type selection in the main zone.	Always	0: Underfloor heating 1: Heat pump convector **2: Radiator**		
1.12	Installer	[041]	Thermostat mode in the main zone.	Always	**0: Leaving water** 1: External room 2: Room		
1.13	Installer	[042]	Thermostat type in the main zone.	[041]=1: ExternalRoom AND [180]=0: Hardware	0: Dual contact **1: Single contact**		
1.13	Installer	[180]	Setting to determine what the source is for the external thermostat.	[041]=1: ExternalRoom	**0: Hardware** 1: External		
1.14	Installer	[169]/[170]	Delta T target during space heating in the main zone.	Always	[1.11]=0: Underfloor heating 3~10°C, step: 0.5°C **[169]=5** [1.11]=1: Heat pump convector 3~10°C, step: 0.5°C **[169]=5** [1.11]=2: Radiator 10~20°C, step: 0.5°C **[170]=10**		
1.15	No	N/A	N/A	N/A	N/A		
1.16	Installer	[050]	Allow space cooling operation in the main zone.	Always	0: No **1: Yes**		
1.17	End user	N/A	Leaving water temperature control ON/OFF in the main zone.	[041]=0: Leaving water	**0: Off** 1: On		
1.18	Installer	[174]	Delta T target during space cooling in the main zone.	Always	3~10°C step: 0.5°C **5**		
1.19	Installer	[048]	The absolute upper limit of the leaving water temperature target with respect to the installed emitter in the main zone.	[099]=1: Yes	20~80°C step: 0.5°C **40**		
1.20	Installer	[049]	Absolute lower limit of the leaving water temperature target with respect to the installed emitter in the main zone.	[099]=1: Yes	3~35°C step: 0.5°C **3**		
1.21	End user	N/A	Name of the main zone.	Always	Main zone		
1.22	End user	N/A	Room target temperature during antifrost in the main zone.	[041]=2: Room	4~16°C step: 0.5°C **8**		
1.23	End user	N/A	Enable the leaving water target schedule without weather-dependent curve for space cooling in the main zone.	[041]=0: Leaving water	**0: Manual mode** 1: Schedule mode		

(*1) *4V*_(*2) *9W*_
(*3) EPB*_(*4) EPV*_(*5) EPSX*_(*6) EPSXB*_
(*7) *SU*

Field settings table						Installer setting at variance with default value	
Breadcrumb	Setting type	code	Setting description	Applicable when	Range / step / **default value**	Date	Value
1.23	End user	N/A	Enable the room temperature target schedule for space cooling in the main zone.	[041]=2: Room	**0: Manual mode** 1: Schedule mode		
1.24	End user	N/A	Schedule of the temperature shift on the weather-dependent leaving water target for space heating in the main zone.	[041]=0: Leaving water AND [1.5]=1: Weather-dependent	N/A		
1.25	End user	N/A	Schedule of the temperature shift on the weather-dependent leaving water target for space cooling in the main zone.	[041]=0: Leaving water AND [1.7]=1: Weather-dependent	N/A		
1.26	Installer	[052]	Allow a temperature shift on the leaving water target around freezing point in the main zone.	Always	**0: None** 1: Low narrow 2: Low wide 3: High narrow 4: High wide		
1.27	End user	N/A	Temperature shift on the weather-dependent leaving water target for space heating in the main zone.	[1.5]=1: Weather-dependent	-10~10°C step:1°C **0**		
1.28	End user	N/A	Temperature shift on the weather-dependent leaving water target for space cooling in the main zone.	[1.7]=1: Weather-dependent	-10~10°C step:1°C **0**		
1.29	Adv. end user	N/A	Room temperature target during space heating in the main zone for buffering.	[041]=2: Room AND [040]=2: Smart Grid ready contacts	12~30°C step:0.5°C **23**		
1.30	Adv. end user	N/A	Room temperature target during space cooling in the main zone for buffering.	[041]=2: Room AND [040]=2: Smart Grid ready contacts	15~35°C step:0.5°C **18**		
1.31	Installer	[158]	Daikin room thermostat connected.	Always	**0: No** 1: Yes		
1.32	End user	N/A	Room temperature control ON/OFF in the main zone.	[041]=2: Room	**0: Off** 1: On		
1.33	Adv. end user	N/A	Optional offset that can be applied to the room temperature target, measured by the optional sensor in the main zone.	[041]=2: Room	-5~5°C step:0.5°C **0**		
1.34	End user	N/A	Room target baseline temperature for the room schedule during space heating in the main zone.	[041]=2: Room	12~30°C step:0.5°C **12**		
1.35	End user	N/A	Room target baseline temperature for the room schedule during space cooling in the main zone.	[041]=2: Room	12~35°C step:0.5°C **30**		
1.36	End user	N/A	Enable a temperature shift on the weather-dependent leaving water target for space heating in the main zone.	[1.5]=1: Weather-dependent	**0: Manual mode** 1: Schedule mode		
1.37	End user	N/A	Enable a temperature shift on the weather-dependent leaving water target for space cooling in the main zone.	[1.7]=1: Weather-dependent	**0: Manual mode** 1: Schedule mode		
1.38	Adv. end user	N/A	Offset on the room temperature on the HCI in the main zone.	[041]=2: Room	-5~5°C step:0.5°C **0**		
1.39	End user	N/A	Leaving water temperature target during space heating in the main zone.	[1.5]=0: Fixed	[054]~[053]°C step: 1°C		
1.40	No	N/A	N/A	N/A	N/A		
1.41	No	N/A	N/A	N/A	N/A		
1.42	End user	N/A	Leaving water temperature target during space cooling in the main zone.	[1.7]=0: Fixed	[056]~[055]°C step: 1°C		
2 Additional zone							
2.1	No	N/A	N/A	N/A	N/A		
2.2	End user	N/A	Enable the leaving water target schedule without weather-dependent curve for space heating in the additional zone.	[057]=0: Leaving water AND [155]=1: Yes	**0: Manual mode** 1: Schedule mode		
2.3	End user	N/A	Heating schedule additional zone.	[057]=0: Leaving water OR [057]=2: Room	N/A		
2.4	End user	N/A	Cooling schedule additional zone.	[057]=0: Leaving water OR [057]=2: Room	N/A		
2.5	Adv. end user	N/A	Target operation mode during space heating in the additional zone.	[155]=1: Yes	**0: Fixed** 1: Weather-dependent		
2.6	Installer	[060]	Upper limit of the leaving water temperature target during space heating in the additional zone.	[155]=1: Yes	[2.11]=2: Radiator [061]~min([015]-5; 75) step: 1°C **75°C** [2.11]≠2: Radiator [061]~min([015]-5; 55) step: 1°C **55°C**		
2.6	Installer	[061]	Lower limit of the leaving water temperature target during space heating in the additional zone.	[155]=1: Yes	20~[060]°C step: 1°C **20**		
2.6	Installer	[062]	Upper limit of the leaving water temperature target during space cooling in the additional zone.	[155]=1: Yes	[063]~22°C step: 1°C **22**		
2.6	Installer	[063]	Lower limit of the leaving water temperature target during space cooling in the additional zone.	[155]=1: Yes	([014]+4)~[062] step: 1°C **7°C**		
2.7	Adv. end user	N/A	Target operation mode during space cooling in the additional zone.	[155]=1: Yes	**0: Fixed** 1: Weather-dependent		
2.8	End user	N/A	Leaving water temperature weather-dependent curve for space heating in the additional zone.	[155]=1: Yes AND [2.5]=1: Weather-dependent	Ambient range: -40~25°C step: 1°C Leaving water temperature range: [061]~[060]°C step: 1°C		
2.9	End user	N/A	Leaving water temperature weather-dependent curve for space cooling in the additional zone.	[155]=1: Yes AND [2.7]=1: Weather-dependent	Ambient range: 10~43°C step: 1°C Leaving water temperature range: [063]~[062]°C step: 1°C		
2.10	No	N/A	N/A	N/A	N/A		
2.11	End user	N/A	Heat emitter type selection in the additional zone.	[155]=1: Yes	0: Underfloor heating 1: Heat pump convector **2: Radiator**		

(*1) *4V*_(*2) *9W*_
(*3) EPB*_(*4) EPV*_(*5) EPSX*_(*6) EPSXB*_
(*7) *SU*

Field settings table						Installer setting at variance with default value	
Breadcrumb	Setting type	code	Setting description	Applicable when	Range / step / **default value**	Date	Value
2.12	Installer	[057]	Thermostat mode in the additional zone.	[155]=1: Yes	[041]=0: Leaving water 0: Leaving water [041]≠0:Leaving Water 1: External Room		
2.13	Installer	[146]	Thermostat type in the additional zone.	[155]=1: Yes AND [057]=1: ExternalRoom AND [181]=0: Hardware	0: Dual contact **1: Single contact**		
2.13	Installer	[181]	Setting to determine what the source is for the external thermostat.	[155]=1: Yes AND [057]=1: ExternalRoom	**0: Hardware** 1: External		
2.14	Installer	[171]/[172]	Delta T target during space heating in the additional zone.	[155]=1: Yes	[2.11]=0: Underfloor heating 3~10°C, step: 0.5°C **[171]=5** [2.11]=1: Heat pump convector 3~10°C, step: 0.5°C **[171]=5** [2.11]=2: Radiator 10~20°C, step: 0.5°C **[172]=10**		
2.15	End user	N/A	Leaving water temperature control ON/OFF in the additional zone.	[155]=1: Yes AND [057]=0: Leaving water	**0: Off** 1: On		
2.16	No	N/A	N/A	N/A	N/A		
2.17	Installer	[148]	Delta T target in the additional zone during space cooling.	[155]=1: Yes	3~10°C, step: 0.5°C **5**		
2.18	End user	N/A	Schedule of the temperature shift on the weather-dependent leaving water target for space heating in the additional zone.	[057]=0: Leaving water AND [2.5]=1: Weather-dependent	N/A		
2.19	End user	N/A	Schedule of the temperature shift on the weather-dependent leaving water target for space cooling in the additional zone.	[057]=0: Leaving water AND [2.7]=1: Weather-dependent	N/A		
2.20	Installer	[059]	Allow a temperature shift on leaving water temperature target around freezing point in the additional zone.	[155]=1: Yes	**0: None** 1: Low narrow 2: Low wide 3: High narrow 4: High wide		
2.21	End user	N/A	Name of the additional zone.	[155]=1: Yes	**Additional Zone**		
2.22	End user	N/A	Temperature shift on the weather-dependent leaving water target for space heating in the additional zone.	[155]=1: Yes AND [2.5]=1: Weather-dependent	-10~10°C step:1°C **0**		
2.23	End user	N/A	Temperature shift on the weather-dependent leaving water target for space cooling in the additional zone.	[155]=1: Yes AND [2.7]=1: Weather-dependent	-10~10°C step:1°C **0**		
2.24	No	N/A	N/A	N/A	N/A		
2.25	No	N/A	N/A	N/A	N/A		
2.26	No	N/A	N/A	N/A	N/A		
2.27	End user	N/A	Enable the leaving water target schedule without weather-dependent curve for space cooling in the additional zone.	[057]=0: Leaving water AND [155]=1: Yes	**0: Manual mode** 1: Schedule mode		
2.28	No	N/A	N/A	N/A	N/A		
2.29	No	N/A	N/A	N/A	N/A		
2.30	End user	N/A	Leaving water temperature target during space heating in the additional zone.	[155]=1: Yes AND [2.5]=0: Fixed	[061]~[060]°C step: 1°C		
2.31	End user	N/A	Enable a temperature shift on the weather-dependent leaving water target for space heating in the additional zone.	[155]=1: Yes AND [2.5]=1: Weather-dependent	**0: Manual mode** 1: Schedule mode		
2.32	End user	N/A	Enable a temperature shift on the weather-dependent leaving water target for space cooling in the additional zone.	[155]=1: Yes AND [2.7]=1: Weather-dependent	**0: Manual mode** 1: Schedule mode		
2.33	Installer	[147]	Allows space cooling operation in the additional zone.	[155]=1: Yes	0: No **1: Yes**		
2.34	No	N/A	N/A	N/A	N/A		
2.35	No	N/A	N/A	N/A	N/A		
2.36	End user	N/A	Leaving water temperature target during space cooling in the additional zone.	[155]=1: Yes AND [2.7]=0: Fixed	[063]~[062]°C step: 1°C		
3 Heating/cooling							
3.1	End user	N/A	Below this outdoor temperature, space heating operation is allowed.	Always	14~35°C step:1°C **20**		
3.1	End user	N/A	Above this outdoor temperature, space cooling operation is allowed.	Always	10~35°C step:1°C **18**		
3.2	End user	N/A	Operation mode used during Central Control.	[155]=1: Yes OR [041]≠1: External Room OR ([042]≠0 Dual contact AND [180]≠1 External)	0: Heating 1: Cooling **2: Automatic**		
3.3	No	N/A	N/A	N/A	N/A		
3.4	Adv. end user	N/A	Enable the room antifrost functionality.	Always	0: Off **1: On**		
3.5	End user	N/A	Operation mode schedule.	[3.2]=2: Automatic	N/A		
3.6	Installer	[155]	Setting to indicate if an additional zone is present.	Always	**0: No** 1: Yes		
3.7	Installer	[018]	Used to calculate the maximum overshoot on the leaving water temperature during space heating for radiator and heat pump convector.	[1.11]≠0: Underfloor heating or [2.11]≠0: Underfloor heating	1~10°C step:0.5°C **5**		
3.7	Installer	[017]	Used to calculate the maximum overshoot on the leaving water temperature during space heating for underfloor heating.	[1.11]=0: Underfloor heating or [2.11]=0: Underfloor heating	1~7°C step:0.5°C **3**		

Field settings table						Installer setting at variance with default value	
Breadcrumb	Setting type	code	Setting description	Applicable when	Range / step / **default value**	Date	Value
3.8	Installer	[007]	Enable the outdoor temperature averaging functionality.	Always	**0: No averaging** 1: 12 hours 2: 24 hours 3: 48 hours 4: 72 hours		
3.9	Installer	[004]	Value used to calculate the maximum undershoot of the leaving water temperature during space cooling.	Always	0~10°C step:0.5°C **5**		
3.10	No	N/A	N/A	N/A	N/A		
3.11	Installer	[014]	Absolute lower limit of the leaving water temperature target during space cooling based on the internal temperature allowance of the Daikin Altherma unit.	Always	3~35°C step:0.5°C **3**		
3.12	Installer	[015]	Absolute upper limit of the leaving water temperature target during space heating based on the internal temperature allowance of the Daikin Altherma unit.	Always	20~80°C step: 1°C **80**		
3.13.1	Installer	[008]	Setting to indicate whether a decoupling vessel is present in the hydraulic system.	Always	**0: Not decoupled** 1: Decoupled		
3.13.2	Installer	[097]	Pump speed of the external pump when flow is requested in the additional zone. Only applicable when field I/O pumps or mixing kit is used.	Always	0~1 step: 0.01 **1**		
3.13.3	Installer	[096]	Pump speed of the external pump when flow is requested in the main zone. Only applicable when field I/O pumps or mixing kit is used.	Always	0~1 step: 0.01 **1**		
3.13.4	Installer	[176]	Mixing kit valve turning time.	Always	20~300 seconds step: 1 second **125**		
3.13.5	Installer	[099]	Setting to indicate the presence of a mixing kit in the hydraulic system.	Always	**0: No** 1: Yes		
3.14	Installer	[158]	Room thermostat present.	Always	**0: No** 1: Yes		
3.15	Installer	[016]	Minimum time the heat pump will be kept on after operation has been started.	Always	480~1800 seconds step: 1 second **540**		
4 Domestic hot water							
4.1	End user	N/A	Domestic hot water operation ON/OFF/ single heat-up triggers.	(*3) [080]=1: Single thermistor or (*4) or (*5)	**0: Off** 1: On		
4.2	No	N/A	N/A	N/A	N/A		
4.3	End user	N/A	Domestic hot water target setpoint for a manual heat-up.	(*3) [080]=1: Single thermistor or (*4) or (*5)	20~[153]°C step: 0.5 **60**		
4.4	End user	N/A	Domestic hot water target setpoint for a powerful heat-up.	(*3) [080]=1: Single thermistor or (*4) or (*5)	20~[153]°C step: 0.5 **60**		
4.5	End user	N/A	Reheat temperature target of the domestic hot water tank scheduled + reheat mode or reheat mode.	[4.7]=0: Reheat or [4.7]=1: Schedule and reheat	(*3)(*4) 20~[153]°C step: 0.5 **45** (*5) 20~[153]°C step: 0.5 **48**		
4.6	End user	N/A	Domestic hot water single heat-up schedule.	(*3) [080]=1: Single thermistor AND [4.7]≠0: Reheat or (*4) AND [4.7]≠0: Reheat	N/A		
4.7	End user	N/A	Domestic hot water heat-up mode setting.	(*3) AND [080]=1: Single thermistor OR (*4)	**0: Reheat** 1: Schedule and reheat 2: Scheduled		
4.8	No	N/A	N/A	N/A	N/A		
4.9	No	N/A	N/A	N/A	N/A		
4.10	Installer	[074]	Minimum time where the tank temperature must be higher than the disinfection target tank temperature before the disinfection is judged as successful.	(*3) [080]=1: Single thermistor	(*3) 300~3600 seconds step: 1 second **3600** (*4)(*5) 2400~3600 seconds step: 1 second **2400**		
4.10	Installer	[151]	Disinfection operation start time. This should be set as the amount of minutes counting from 00:00 (in minutes).	(*3) [080]=1: Single thermistor or (*4) or (*5)	0~1439 minutes step: 1 minute **60**		
4.10	Installer	[152]	Enable disinfection operation to be executed on a daily basis.	(*3) [080]=1: Single thermistor or (*4) or (*5)	**0: Off** 1: On		

(*1) *4V*_(*2) *9W*_
(*3) EPB*_(*4) EPV*_(*5) EPSX*_(*6) EPSXB*_
(*7) *SU*

Field settings table						Installer setting at variance with default value	
Breadcrumb	Setting type	code	Setting description	Applicable when	Range / step / **default value**	Date	Value
4.10	Installer	[150]	Domestic hot water tank disinfection day (when not all days are selected).	(*3) [080]=1: Single thermistor or (*4) or (*5)	1~7 step:1 **5**		
4.10	Installer	[073]	Disinfection target temperature of the domestic hot water tank.	(*3) [080]=1: Single thermistor or (*4) or (*5)	(*3) 55~[153]°C step: 0.5°C **60** (*4)(*5) 60~[153]°C step: 0.5°C **60**		
4.11	Installer	[153]	Maximum allowed domestic hot water tank setpoint.	(*3) [080]=1: Single thermistor or (*4) or (*5)	(*3) [080] =1: Single thermistor AND [098]=0: EKHWS/E 150 l / 1: EKHWS/E 180 l / 6: 3rd party small coil 40~60°C step: 0.5°C **60** (*3) [080]=1: Single thermistor AND [098]=5: EKHWP/HYC with booster heater 40~80°C step: 0.5°C **75** (*3) [080]=1: Single thermistor AND [098]=2: EKHWS/E 200 l / 3: EKHWS/E 250 l / 4: EKHWS/E 300 l / 7: 3rd party big coil 40~75°C step: 0.5°C **75** (*4) 40~65°C step: 0.5°C **65** (*5) 40~75°C step: 0.5°C **75°C** (*7) 40~60°C step: 0.5°C **60°C**		
4.12.1	End user	N/A	Domestic hot water reheat hysteresis for heat losses.	(*3) [080]=1: Single thermistor AND [4.7]≠2: Scheduled or (*4) AND [4.7]≠2: Scheduled or (*5)	1~40°C step: 0.5°C **6**		
4.13	Installer	[149]	Setting to choose the functionality of the external domestic hot water pump.	(*3) [080]=1: Single thermistor or (*4) or (*5)	**0: None** 1: Instant hot water 2: Disinfection 3: Both		
4.14.1	Installer	[173]	Booster heater thermal capacity selection.	(*3) [080]=1: Single thermistor	1~4 kW step: 0.01 kW **3**		
4.14.2	No	N/A	N/A	N/A	N/A		
4.14.3	No	N/A	N/A	N/A	N/A		
4.14.4	Installer	[064]	Offset added on the default target tank temperature in case the booster heater is the only available heat source during a tank heat-up.	(*3) [080]=1: Single thermistor	0~20°C step: 0.5 **5**		
4.15	No	N/A	N/A	N/A	N/A		
4.16	End user	N/A	An additional heat source is allowed to heat up the tank when the heat pump is running in space heating/cooling.	(*3) [080]=1: Single thermistor or [078]=1: Yes	**0: Off** 1: On		
4.17	End user	N/A	An additional heat source is immediately allowed to assist the heat pump during tank heat-up operation.	(*3) [080]=1: Single thermistor or (*4) or (*5)	**0: Off** 1: On		
4.18	Installer	[072]	Enable the disinfection functionality.	(*3) [080]=1: Single thermistor or (*4) or (*5)	(*3) **1: ON** (*4) **1: ON** (*5) **0: OFF**		

(*1) *4V*_(*2) *9W*_
(*3) EPB*_(*4) EPV*_(*5) EPSX*_(*6) EPSXB*_
(*7) *SU*

Field settings table						Installer setting at variance with default value	
Breadcrumb	Setting type	code	Setting description	Applicable when	Range / step / **default value**	Date	Value
4.19	Adv. end user	N/A	Reheat trigger temperature of the domestic hot water tank to ensure sufficient energy is present in the tank. This setting is optimised for sufficient comfort.	(*3) [080]=1: Single thermistor AND [4.7]≠2: Scheduled or (*4) AND [4.7]≠2: Scheduled or (*5) AND [4.7]≠2: Scheduled	(*3) 10~85°C step: 0.5 **38** (*4) 10~85°C step: 0.5 **38** (*5) 10~85°C step: 0.5 **40**		
4.20	Installer	[070]	Delay timer of the additional heat source activation when the heat pump is the main source during tank heat-up operation.	(*3) [080]=1: Single thermistor or (*4) or (*5)	(*3) 0~10800 seconds step: 300 second **1200** (*4) 0~10800 seconds step: 300 second **10800** (*5) 0~10800 seconds step: 300 second **1200**		
4.21	No	N/A	N/A	N/A	N/A		
4.22	No	N/A	N/A	N/A	N/A		
4.23	Installer	[064]	Offset added on the default target tank temperature in case the booster heater is the only available heat source during a tank heat-up.	(*3) [080]=1: Single thermistor or [078]=1: Yes	0~20°C step: 0.5 **5**		
4.24	End user	N/A	Enable the domestic hot water reheat setpoint to change according to a schedule.	(*5)	**0: Off** 1: On		
4.25	End user	N/A	Reheat schedule.	(*5)	20~[153]°C step: 0.5 **45**		
4.26	End user	N/A	Domestic hot water pump schedule.	(*3) [080]=1: Single thermistor AND [149]=1 or 3: Instant hot water or both or (*4) [149]=1 or 3: Instant hot water or both or (*5) [149]=1 or 3: Instant hot water or both	N/A		
5 Settings							
5.1	Installer	N/A	Start a forced defrost.	Always	N/A		
5.2	End user	N/A	Quiet mode user.	Always	**0: Off** 1: Auto 2: Manual		
5.2.1	End user	N/A	Quiet level user.	Always	0: Off **1: Quiet** 2: More quiet 3: Most quiet		
5.2.2	Adv. end user	N/A	Schedule of the quiet level for the user.	Always	N/A		
5.2.9	Installer	[138]	Installer overrule of the user-defined time to switch over from Night to Day during quiet mode.	Always	0~1439 minutes step: 1 minute **360**		
5.2.10	Installer	[136]	Installer overrule of the user-defined quiet level during the "Day" period.	Always	**0: Off** 1: Quiet 2: More quiet 3: Most quiet		
5.2.11	Installer	[139]	Installer overrule of the user-defined time to switch over from Day to Night during quiet mode.	Always	0~1439 minutes step: 1 minute **1320**		
5.2.12	Installer	[137]	Installer overrule of the user-defined quiet level during the "Night" period.	Always	**0: Off** 1: Quiet 2: More Quiet 3: Most Quiet		
5.3	End user	N/A	Time/date.	Always	N/A		
5.3	End user	N/A	Daylight saving time.	Always	0: Disabled **1: Enabled**		
5.3	End user	N/A	Clock type.	Always	0: 12h **1: 24h**		
5.4	End user	N/A	Breadcrumbs.	Always	**0: Off** 1: On		
5.5	Installer	[083]	Setting to choose the grid connection type of the heat pump unit.	Always	0: Single-phase **1: Three-phase star** 2: Three-phase delta		
5.5	Installer	[154]	Setting to indicate if the backup heater fuse in the electrical cabinet is bigger than 10 A.	(*3) [083]= 1: Three-phase star or (*4) [083]= 1: Three-phase star	0: No **1: Yes**		

(*1) *4V*_(*2) *9W*_
(*3) EPB*_(*4) EPV*_(*5) EPSX*_(*6) EPSXB*_
(*7) *SU*

Field settings table						Installer setting at variance with default value	
Breadcrumb	Setting type	code	Setting description	Applicable when	Range / step / **default value**	Date	Value
5.5	Installer	[092]	Maximum capacity of the backup heater.	Always	(*2)/(*5) [083]=0: 2~6 kW: step: 1 kW **6** [083]=2 2~4 kW: step: 1 kW **4** [083]=1 and [154]=0 2~4 kW: step: 1 kW **4** [083]=1 and [154]=1 2~9 kW: step: 1 kW **9** (*1) 2~4.5 kW: step: 0.5 kW **4.5**		
5.6.1	Adv. end user	N/A	Setting to enable the equilibrium (capacity shortage) logic.	Always	0: Never 1: Always **2: Below equilibrium**		
5.6.2	Adv. end user	N/A	Outdoor temperature threshold to allow potential capacity shortage. Below this outdoor temperature, capacity shortage will be possible.	Always	-15~35°C step: 1°C **0**		
5.7	Installer	N/A	Overview field settings.	Always	N/A		
5.8	No	N/A	N/A	N/A	N/A		
5.9	End user	N/A	Country.	Always	0: Albania / 1: Austria **2: Belgium** / 3: Bosnia 4: Bulgaria / 5: Croatia 6: Cyprus / 7: Czech Republic 8: Denmark / 9: Estonia 10: Finland / 11: France 12: Germany / 13: Greece 14: Hungary / 15: Iceland 16: Ireland / 17: Turkey 18: Italy / 19: Latvia 20: Liechtenstein / 21: Lithuania 22: Luxembourg / 23: Macedonia 24: Malta / 25: Moldava 26: Montenegro / 27: Netherlands 28: Norway / 29: Poland 30: Portugal / 31: Romania 32: Serbia / 33: Slovakia 34: Slovenia / 35: Spain 36: Sweden / 37: United Kingdom 38: Switzerland		
5.9	End user	N/A	Language.	Always	0: Albanian / 1: Belarusian 2: Bosnian / 3: Bulgarian 4: Croatian / 5: Czech 6: Danish / 7: Dutch **8: English** / 9: Estonian 10: Finnish / 11: French 12: German / 13: Greek 14: Hungarian / 15: Italian 16: Latvian / 17: Lithuanian 18: Macedonian / 19: Norwegian 20: Polish / 21: Portuguese 22: Romanian / 23: Russian 24: Serbian / 25: Slovak 26: Slovenian / 27: Spanish 28: Swedish / 29: Turkish 30: Ukrainian		
5.10	No	N/A	N/A	N/A	N/A		
5.11	Installer	N/A	Trigger to reset the FAN operating hours.	Always	N/A		
5.12	End user	N/A	Keyboard layout.	Always	**0: QWERTY** 1: AZERTY		
5.13	End user	N/A	User setting to enable more advanced settings.	Always	**0: No** 1: Yes		
5.14.1	Installer	[012]	Defines whether the capacity of the installed tank boiler is sufficient to cover the complete load of the house. If so, it can become the main heat source.	[078]=1: Yes	0: Off **1: On**		
5.14.2	Installer	[023]	The upper outdoor temperature limit of the changeover point from heat pump to bivalent/tank boiler.	[093]=1: Yes or [078]=1: Yes	max([024]+2; -25)~25°C step:1°C **5**		
5.14.2	Installer	[024]	The lower outdoor temperature limit of the changeover point from heat pump to bivalent/tank boiler.	[093]=1: Yes or [078]=1: Yes	-25~25°C step:1°C **0**		
5.14.4	Installer	[021]	Hysteresis on the outdoor temperature for the changeover from heat pump to bivalent/tank boiler.	[093]=1: Yes or [078]=1: Yes	2~10°C step:1°C **3**		
5.14.6	Installer	[025]	Minimum time the bivalent boiler pump in space heating stays on after the request has disappeared.	[093] =1: Yes	0~1500 seconds step: 1 second **600**		
5.15	No	N/A	N/A	N/A	N/A		
5.16	No	N/A	N/A	N/A	N/A		
5.17	End user	N/A	Display screen brightness.	Always	30~100% step: 1% **70**		
5.18	Installer	N/A	Trigger to (software) restart the indoor unit.	Always	N/A		
5.19	Installer	[196]	Diverter valve selection.	(*4)	1: YJS Profile 1 2: Danfoss Profile 1		
5.20	No	N/A	N/A	N/A	N/A		
5.21.1	Adv. end user	N/A	Enable tank support during defrost to compensate for the space heating demand.	(*5)	**0: Disabled** 1: Optimized 2: Continuous		

(*1) *4V*_(*2) *9W*_
(*3) EPB*_(*4) EPV*_(*5) EPSX*_(*6) EPSXB*_
(*7) *SU*

Field settings table						Installer setting at variance with default value	
Breadcrumb	Setting type	code	Setting description	Applicable when	Range / step / **default value**	Date	Value
5.21.2	Installer	[002]	Enable the domestic hot water tank to be proactively preheated to allow a tank defrost.	[078]=1: Yes	**0: Off** 1: On		
5.21.3	End user	N/A	Allow the domestic hot water tank to support the space heating operation by adding capacity to the space heating circuit.	(*5)	**0: Off** 1: On		
5.21.4	Installer	[188]	Overall installer setting to limit the tank boiler support.	[078]=1: Yes	4~35 kW: step: 1 kW **10**		
5.21.5	Installer	[184]	Setting to enable the free energy functionality of the tank.	(*5)	**0: Off** 1: On		
5.21.6	Installer	[187]	Overall installer setting to limit the tank support during the free energy functionality.	[185]=1: Yes	2~35 kW: step: 1 kW **10**		
5.21.7	Installer	[182]	Setting to allow the free energy to be used as main source for space heating operation.	[184]=1: Yes	0: Always 1: AboveAmbient **2: Never**		
5.21.8	Installer	[183]	Ambient temperature that allows the excess energy in the tank to be drained for space heating.	(*5)	-28~35°C step:0,5°C **8**		
5.21.9	Installer	[185]	The solar system is installed on the tank.	(*5)	**0: Off** 1: On		
5.21.10	Installer	[186]	The installed solar system has priority over other heat sources.	[185]=1: Yes	**0: Off** 1: On		
5.22	Installer	[175]	Offset on the external outdoor temperature sensor.	[13]=1: External outdoor sensor	-5~5°C step: 0.5°C **0**		
5.23	End user	N/A	Emergency mode selection.	Always	0: Manual 1: Auto 2: Auto space heating reduced + DHW on **3: Auto space heating reduced + DHW off** 4: Auto space heating normal + DHW off		
5.24	No	N/A	N/A	N/A	N/A		
5.25	No	N/A	N/A	N/A	N/A		
5.26	End user	N/A	Display inactivity timer.	Always	**0: No** 1: Yes		
5.27.1	Adv. end user	N/A	Enable the holiday mode.	Always	**0: No** 1: Yes		
5.27.2	Adv. end user	N/A	Holiday period.	Always	N/A		
5.28.1	Installer	[140]	Enable the space heating priority functionality.	(*3) [080]=1: Single thermistor or (*4) or (*5)	**0: No** 1: Yes		
5.28.2	Installer	[019]	Below this outdoor temperature, the space heating priority function is activated (if enabled).	(*3) [080]=1: Single thermistor or (*4) or (*5)	-15~35°C step:1°C **0**		
5.28.2	Installer	[020]	Outdoor temperature where the space cooling operation timer is at its maximum value.	(*3) [080]=1: Single thermistor or (*4) or (*5)	20~50°C step:1°C **35**		
5.28.3	Installer	[131]	Time that heat pump is reserved for space heating operation during balancing. Balancing = simultaneous requests for space heating and tank heat-up.	(*3) [080]=1: Single thermistor or (*4) or (*5)	1800~36000 seconds step: 60 seconds **3600**		
5.28.4	Installer	[132]	Time that heat pump is reserved for space cooling operation during balancing. Balancing = simultaneous requests for space cooling and tank heat-up.	(*3) [080]=1: Single thermistor or (*4) or (*5)	1800~36000 seconds step: 60 seconds **3600**		
5.28.5	Installer	[133]	Time that heat pump is reserved for tank heat-up operation during balancing (lower limit). Balancing = simultaneous requests for space heating/cooling and tank heat-up.	(*3) [080]=1: Single thermistor or (*4) or (*5)	900~18000 seconds step: 60 seconds **2700**		
5.28.5	Installer	[134]	Time that heat pump is reserved for tank heat-up operation during balancing (upper limit). Balancing = simultaneous requests for space heating/cooling and tank heat-up.	(*3) [080]=1: Single thermistor or (*4) or (*5)	900~18000 seconds step: 60 seconds **7500**		
5.29	Installer	N/A	Refrigerant recovery mode.	Always	N/A		
5.30	End user	N/A	Emergency acknowledgement.	Only in case there is an emergency request	N/A		
5.31	No	N/A	N/A	N/A	N/A		
5.32	Installer	[078]	Setting to indicate when a tank boiler is present and can become active.	(*6) and [093]=0: No	**0: No** 1: Yes		
5.33	No	N/A	N/A	N/A	N/A		
5.34	No	N/A	N/A	N/A	N/A		
5.35	No	N/A	N/A	N/A	N/A		

(*1) *4V*_(*2) *9W*_
(*3) EPB*_(*4) EPV*_(*5) EPSX*_(*6) EPSXB*_
(*7) *SU*

Field settings table						Installer setting at variance with default value	
Breadcrumb	Setting type	code	Setting description	Applicable when	Range / step / **default value**	Date	Value
5.36	Installer	[005]	Water pipe freeze prevention mode setting.	Always	0: Disabled **1: Continuous** 2: Intermittent		
5.37	Installer	[093]	The additional boiler kit for space heating is installed and allowed to operate.	[078]=0: No	**0: No** 1: Yes		
7 Maintenance mode							
7.7.1	Installer	[030]	Delta T target during a space heating test run.	Always	2~20°C step: 0.5°C **5**		
7.7.2	Installer	[031]	Leaving water temperature target during a space heating test run.	Always	5~71°C step:1°C **35**		
7.7.3	Installer	[032]	Overwritten target room temperature used during a space heating test run.	Always	5~30°C step: 0.5°C **20**		
7.7.4	Installer	[033]	Delta T target during a space cooling test run.	Always	2~10°C step:0.5°C **5**		
7.7.5	Installer	[034]	Leaving water temperature target during a space cooling test run.	Always	5~30°C step: 1°C **15**		
7.7.6	Installer	[035]	Overwritten room temperature used during a space cooling test run.	Always	5~30°C step: 0.5°C **20**		
7.7.7	Installer	[077]	Tank target temperature during a tank heat-up test run.	Always	20~85°C step: 0.5°C **50**		
7.7.8	Installer	[094]	Pump PWM target (low). Only used during actuator test run and air purge test run.	Always	0.1~1 step: 0.1 **1**		
7.7.8	Installer	[095]	Pump PWM target (high). Only used during actuator test run and air purge test run.	Always	0.1~1 step: 0.1 **0.5**		
7.7.9	Installer	[145]	Tank temperature target during a booster heater test run.	(*3) [080]=1: Single thermistor	25~60°C step: 0.5°C **50**		
8 Connectivity							
8.1	End user	N/A	When DHCP is set off, one can modify the IP configuration.	Always	N/A		
8.2.1 - 8.2.12	No	N/A	Connection status overview of connected peripherals.	Always	Depending on the component.		
8.3.1	End user	N/A	Wireless gateway (WLAN dongle) present setting.	Always	**0: No** 1: Yes		
8.3.2	End user	N/A	Enable AP mode to connect the WLAN dongle to the local home network.	[8.2.9]=1: Connected (A DX WLAN dongle should be connected to the unit)	**0: Disable** 1: Enable 2: In progress		
8.3.3	End user	N/A	Trigger to reboot the wireless gateway.	[8.2.9]=1: Connected (A DX WLAN dongle should be connected to the unit)	**0: Remain** 1: Reset		
8.3.4	End user	N/A	Enable the WPS functionality of the wireless gateway.	[8.2.9]=1: Connected (A DX WLAN dongle should be connected to the unit)	**0: Disable** 1: Enable 2: In progress		
8.3.5	No	N/A	N/A	N/A	N/A		
8.3.7	End user	N/A	Trigger to reset the WLAN dongle to factory default (forget all network data).	[8.2.9]=1: Connected (A DX WLAN dongle should be connected to the unit) And the DX WLAN has recent firmware to support this function.	**0: Remain** 1: Reset		
8.4.1	End user	N/A	Current assigned IP address.	Always	N/A		
8.4.2	End user	N/A	Current assigned subnet mask.	Always	N/A		
8.4.3	End user	N/A	Current assigned default gateway address.	Always	N/A		
8.4.4	End user	N/A	Current assigned DNS 1 address.	Always	N/A		
8.4.5	End user	N/A	Current assigned DNS 2 address.	Always	N/A		
8.4.6	End user	N/A	Unit LAN MAC/UEI address.	Always	N/A		
8.5.1	End user	N/A	Enable Daikin Home Controls.	Always	**0: Off** 1: On		
8.5.2	End user	N/A	Dehumidifier present setting (after being installed).	Always	**0: Off** 1: On		
8.5.3	End user	N/A	Dew sensor present setting (after being installed).	[8.5.2]=1 : On	**0: No** 1: Normally open 2: Normally closed		
8.5.4	End user	N/A	Humidity limit.	[8.5.2]=1 : On	40~80% step: 1% **55**		
8.5.5	End user	N/A	Humidity limit when dew sensor is not installed.	[8.5.2]=1 : On AND [8.5.3]=0 : No	41~80% step: 1% **70**		
8.6	No	N/A	Safe USB removal request before unplugging the USB.	When one or more USB ports are actively used.	**0: No** 1: Yes		
8.7	End user	N/A	Enable Modbus TCP/IP non-TLS (port 502).	Always	**0: No** 1: Yes		
8.8	End user	N/A	Enable Modbus TCP/IP TLS (port 802).	Always	**0: No** 1: Yes		
8.9	No	N/A	Remove the current connection interface (WLAN/LAN) from the cloud.	[8.11]= 1 : WLAN OR [8.11]=2 : LAN	N/A		
8.10	No	N/A	Connect unit to the cloud.	WLAN or LAN is not yet connected.	N/A		
8.11	Installer	N/A	Select connection type to the cloud.	Always	0: None **1: WLAN** 2: LAN		
9 Energy							
9.1	Adv. end user	N/A	Fixed electricity price chosen by the user when the electricity price is not changed via a schedule.	[9.3]=0: Off	1~5000 euro cents/kWh step: 1 cent **15**		
9.2	Adv. end user	N/A	Baseline electricity price.	[9.3]=1: On	1~5000 euro cents/kWh step: 1 cent **5**		
9.3	Adv. end user	N/A	Enable the electricity price to change according a schedule.	[093]=1: Yes or [078]=1: Yes	**0: Off** 1: On		
9.4	Adv. end user	N/A	Electricity price schedule.	[9.3]=1: On	N/A		

(*1) *4V*_(*2) *9W*_
(*3) EPB*_(*4) EPV*_(*5) EPSX*_(*6) EPSXB*_
(*7) *SU*

Field settings table						Installer setting at variance with default value	
Breadcrumb	Setting type	code	Setting description	Applicable when	Range / step / **default value**	Date	Value
9.5	Adv. end user	N/A	Fossil price.	[093]=1: Yes or [078]=1: Yes	1~5000 euro cents/kWh step: 1 cent **10**		
9.6	No	N/A	N/A	N/A	N/A		
9.7	No	N/A	N/A	N/A	N/A		
9.8	No	N/A	N/A	N/A	N/A		
9.9	No	N/A	Legal disclaimer.	N/A	N/A		
9.10	No	N/A	N/A	N/A	N/A		
9.11	Installer	[026]	Efficiency of the boiler.	[093]=1: Yes or [078]=1: Yes	0.1~1 step: 0.01 **0.9**		
9.12	Installer	[141]	The target COP used in the efficiency calculation of the tank boiler.	[093]=1: Yes or [078]=1: Yes	0~6 step:0.1 **2.5**		
9.13	Adv. end user	N/A	Enable the switch-over point between heat pump and bivalent to be based on COP caluculation taking into account the current energy price.	[093]=1: Yes or [078]=1: Yes	**0: No** 1: Yes		
9.14.1	Installer	[040]	Demand response mode setting.	Always	**0: None** 1: Heat pump tariff 2: Smart Grid ready contacts 3: Smart meter contact		
9.14.1	Installer	[179]	Setting to determine what the source is for the demand response mode setting.	[040]=2: Smart Grid ready contacts	**0: Hardware** 1: External		
9.14.2	Installer	[037]	Setting to allow another heat source to take over space heating operation during demand response mode = forced off.	[040]=1: Heat pump tariff or [040]=2: Smart Grid ready contacts	**0: No take-over** 1: Fossil take-over ([093]=1: Yes or [078]=1: Yes) 2: Heater take-over		
9.14.3	Installer	[071]	Allow another heat source to take over the tank heat-up operation during demand response mode = forced off.	[040]=1: Heat pump tariff or [040]=2: Smart Grid ready contacts	**0: No take-over** 1: Fossil take-over ([078]=1: Yes) 2: Heater take-over 3: Only booster heater take-over (*3)		
9.14.4	Installer	[036]	Buffering is allowed during space heating.	[040]=2: Smart Grid ready contacts	0: Off **1: On**		
9.14.5	Installer	[038]	Electrical heat sources are allowed to operate during space heating buffering.	[040]=2: Smart Grid ready contacts	0: No **1: Yes**		
9.14.6	Installer	[039]	Electrical heat sources are allowed to operate during tank buffering.	[040]=2: Smart Grid ready contacts	0: No **1: Yes**		
9.14.7	Installer	[135]	Applicable power limit during demand response smart meter contact.	[040]=3: Smart meter contact	2~20 kW step: 0.1 kW **4.2**		
9.15.1	Installer	N/A	Enable legal limit.	[5.9]=36: Sweden	**0: Off** 1: On		
9.15.2	Installer	[190]	Legal limit.	[5.9]=36: Sweden	Outdoor unit type dependent~30 kW step: 0.1 kW **30**		
9.15.3	Installer	[189]	System limit.	Always	Outdoor unit type dependent~30 kW step: 0.1 kW **30**		
9.15.4	Installer	[191]	Outdoor unit fuse limit.	Outdoor unit type dependent	Outdoor unit type dependent~63 A step: 1 A **50**		
10 Configuration wizard							
10.1	End user	N/A	Country.	Always	0: Albania / 1: Austria **2: Belgium** / 3: Bosnia 4: Bulgaria / 5: Croatia 6: Cyprus / 7: Czech Republic 8: Denmark / 9: Estonia 10: Finland / 11: France 12: Germany / 13: Greece 14: Hungary / 15: Iceland 16: Ireland / 17: Turkey 18: Italy / 19: Latvia 20: Liechtenstein / 21: Lithuania 22: Luxembourg / 23: Macedonia 24: Malta / 25: Moldava 26: Montenegro / 27: Netherlands 28: Norway / 29: Poland 30: Portugal / 31: Romania 32: Serbia / 33: Slovakia 34: Slovenia / 35: Spain 36: Sweden / 37: United Kingdom 38: Switzerland		
10.1	End user	N/A	Language.	Always	0: Albanian / 1: Belarusian 2: Bosnian / 3: Bulgarian 4: Croatian / 5: Czech 6: Danish / 7: Dutch **8: English** / 9: Estonian 10: Finnish / 11: French 12: German / 13: Greek 14: Hungarian / 15: Italian 16: Latvian / 17: Lithuanian 18: Macedonian / 19: Norwegian 20: Polish / 21: Portuguese 22: Romanian / 23: Russian 24: Serbian / 25: Slovak 26: Slovenian / 27: Spanish 28: Swedish / 29: Turkish 30: Ukrainian		
10.2	No	N/A	N/A	N/A	N/A		
10.3	End user	N/A	Time/date.	Always	N/A		
10.3	End user	N/A	Daylight saving time.	Always	0: Disabled **1: Enabled**		

(*1) *4V*_(*2) *9W*_
(*3) EPB*_(*4) EPV*_(*5) EPSX*_(*6) EPSXB*_
(*7) *SU*

Field settings table						Installer setting at variance with default value	
Breadcrumb	Setting type	code	Setting description	Applicable when	Range / step / **default value**	Date	Value
10.4	Installer	[098]	Selection of the non-integrated domestic hot water tank connected to the wall-mounted unit.	(*3) [080]=1: Single thermistor	**0: EKHWS/E 150 l** 1: EKHWS/E 180 l 2: EKHWS/E 200 l 3: EKHWS/E 250 l 4: EKHWS/E 300 l 5: EKHWP/HYC with booster heater 6: 3rd party small coil 7: 3rd party big coil		
10.4	Installer	[155]	Setting to indicate if an additional zone is present.	Always	**0: No** 1: Yes		
10.4	Installer	[080]	This setting indicates if there is a tank connected.	(*3)	**0: None** 1: Single thermistor		
10.4	Installer	[093]	The additional boiler kit for space heating is installed and allowed to operate.	[078]=0: No	**0: No** 1: Yes		
10.5	Installer	N/A	Field IO terminal selection for the 3-way valve.	(*3) [080]=1: Single thermistor	Refer to menu [13] Field IO.		
10.5	Installer	N/A	Field IO terminal selection for the bivalent bypass valve.	[093]=1: Yes	Refer to menu [13] Field IO.		
10.6	Installer	[012]	Defines whether the capacity of the installed tank boiler is sufficient to cover the complete load of the house. If so, it can become the main heat source.	[078]=1: Yes	0: Off **1: On**		
10.6	Installer	[078]	Setting to indicate when a tank boiler is present and can become active.	(*6) and [093]=0: No	**0: No** 1: Yes		
10.6	Installer	[011]	Maximum deliverable thermal capacity in the space heating circuit by the domestic hot water tank during tank support.	(*5)	4~35 kW step: 1 kW **20**		
10.7	End user	N/A	Emergency mode selection.	Always	0: Manual 1: Auto 2: Auto space heating reduced + DHW on **3: Auto space heating reduced + DHW off** 4: Auto space heating normal + DHW off		
10.8	Installer	[083]	Setting to choose the grid connection type of the heat pump unit.	Always	0: Single-phase **1: Three-phase star** 2: Three-phase delta		
10.8	Installer	[154]	Setting to indicate if the backup heater fuse in the electrical cabinet is bigger than 10 A.	(*3) [083]= 1: Three-phase star or (*4) [083]= 1: Three-phase star	0: No **1: Yes**		
10.8	Installer	[092]	Maximum capacity of the backup heater.	Always	(*2)/(*5) [083]=0: 2~6 kW: step: 1 kW **6** [083]=2 2~4 kW: step: 1 kW **4** [083]=1 and [154]=0 2~4 kW: step: 1 kW **4** [083]=1 and [154]=1 2~9 kW: step: 1 kW **9** (*1) 2~4.5 kW: step: 0.5 kW **4.5**		
10.9	End user	N/A	Heat emitter type selection in the main zone.	Always	0: Underfloor heating 1: Heat pump convector **2: Radiator**		
10.9	Installer	[041]	Thermostat mode in the main zone.	Always	**0: Leaving water** 1: External room 2: Room		
10.10	Adv. end user	N/A	Leaving water control mode during space heating in the main zone.	Always	**0: Fixed** 1: Weather-dependent		
10.10	Adv. end user	N/A	Leaving water control mode during space cooling in the main zone.	[10.9]=0: Underfloor heating or [10.9]=1: Heat pump convector	**0: Fixed** 1: Weather-dependent		
10.11	End user	N/A	Leaving water temperature weather-dependent curve for space heating in the main zone.	[10.10]=1: Weather-dependent	Ambient range: -40~25°C step: 1°C Leaving water temperature range: [054]~[053]°C step: 1°C		
10.12	End user	N/A	Leaving water temperature weather-dependent curve for space cooling in the main zone.	[10.10]=1: Weather-dependent	Ambient range: 10~43°C step: 1°C Leaving water temperature range: [056]~[055]°C step: 1°C		
10.13	Installer	[057]	Thermostat mode in the additional zone.	[155]=1: Yes	[41]=0: Leaving water 0: Leaving water [41]≠0: Leaving water 1: External room		
10.13	End user	N/A	Heat emitter type selection in the additional zone.	[155]=1: Yes	0: Underfloor heating 1: Heat pump convector **2: Radiator**		
10.14	Adv. end user	N/A	Target operation mode during space heating in the additional zone.	[155]=1: Yes	**0: Fixed** 1: Weather-dependent		
10.14	Adv. end user	N/A	Target operation mode during space cooling in the additional zone.	[155]=1: Yes AND [10.13]=0: Underfloor heating or [10.13]=1: Heat pump convector	**0: Fixed** 1: Weather-dependent		

(*1) *4V*_(*2) *9W*_
(*3) EPB*_(*4) EPV*_(*5) EPSX*_(*6) EPSXB*_
(*7) *SU*

Field settings table						Installer setting at variance with default value	
Breadcrumb	Setting type	code	Setting description	Applicable when	Range / step / **default value**	Date	Value
10.15	End user	N/A	Leaving water temperature weather-dependent curve for space heating in the additional zone (leaving water temperature limits).	[155]=1: Yes AND [10.14]=1: Weather-dependent	Ambient range: -40~25°C step: 1°C Leaving water temperature range: [061]~[060]°C step: 1°C		
10.16	End user	N/A	Leaving water temperature weather-dependent curve for space cooling in the additional zone (leaving water temperature limits).	[155]=1: Yes AND [10.14]=1: Weather-dependent	Ambient range: 10~43°C step: 1°C Leaving water temperature range: [063]~[062]°C step: 1°C		
10.17	End user	N/A	Domestic hot water heat-up mode setting.	(*3) AND [080]=1: Single thermistor OR (*4)	**0: Reheat** 1: Schedule and reheat 2: Scheduled		
10.18	End user	N/A	Reheat temperature target of the domestic hot water tank scheduled + reheat mode or reheat mode.	[4.7]=0: Reheat or [4.7]=1: Schedule and reheat	(*3)(*4) 20~[153]°C step: 0.5 **45** (*5) 20~[153]°C step: 0.5 **48**		
10.18	End user	N/A	Domestic hot water reheat hysteresis for heat losses.	(*3) [080]=1: Single thermistor AND [4.7]≠2: Scheduled or (*4) AND [4.7]≠2: Scheduled or (*5) AND [4.7]≠2: Scheduled	1~40°C step: 0.5°C **6**		
13 Field IO							
13.1 / 13.2 / 13.5	Installer	[100]	(*3)(*4): Terminal X42M 9-10-11 (*5): Terminal X43M 7-8-9	0: Not connected 1: Main zone shut-off valve 2: Add. zone shut-off valve 3: Alarm 4: External heat source 6: Cooling/Heating mode 7: DHW on signal (*4)(*5) 8: 3-way valve (*3) 9: Bivalent bypass valve 10: DHW pump 11: C/H secondary pump 12: C/H pump ext. main 13: C/H pump ext. add.	**0: Not connected (*5)** **1: Main zone shut-off valve (*3)(*4)** 2: Add. zone shut-off valve 3: Alarm 4: External heat source 6: Cooling/Heating mode 7: DHW on signal 8: 3-way valve 9: Bivalent bypass valve 10: DHW pump 11: C/H secondary pump 12: C/H pump ext. main 13: C/H pump ext. add.		
13.2 / 13.3 / 13.4	Installer	[101]	(*4): Terminal X42M 25-26 (*3): Terminal X43M 7-8 (*5): Terminal X42M 13-14	0: Not connected 1: Main zone shut-off valve 2: Add. zone shut-off valve 3: Alarm 4: External heat source 6: Cooling/Heating mode 7: DHW on signal (*4)(*5) 9: Bivalent bypass valve 10: DHW pump 11: C/H secondary pump 12: C/H pump ext. main 13: C/H pump ext. add.	**0: Not connected** 1: Main zone shut-off valve 2: Add. zone shut-off valve 3: Alarm 4: External heat source 6: Cooling/Heating mode 7: DHW on signal 9: Bivalent bypass valve 10: DHW pump 11: C/H secondary pump 12: C/H pump ext. main 13: C/H pump ext. add.		
13.2 / 13.3 / 13.4	Installer	[124]	NO/NC	1: Main zone shut-off valve 2: Add. zone shut-off valve 3: Alarm 6: Cooling/Heating mode 7: DHW on signal (*4)(*5) 9: Bivalent bypass valve	**0: NO** 1: NC		
13.2 / 13.3 / 13.4	Installer	[103]	(*4): Terminal X42M 27-28 (*3): Terminal X43M 9-10 (*5): Terminal X42M 15-16	0: Not connected 1: Main zone shut-off valve 2: Add. zone shut-off valve 3: Alarm 4: External heat source 6: Cooling/Heating mode 7: DHW on signal (*4)(*5) 9: Bivalent bypass valve 10: DHW pump 11: C/H secondary pump 12: C/H pump ext. main 13: C/H pump ext. add.	**0: Not connected** 1: Main zone shut-off valve 2: Add. zone shut-off valve 3: Alarm 4: External heat source 6: Cooling/Heating mode 7: DHW on signal 9: Bivalent bypass valve 10: DHW pump 11: C/H secondary pump 12: C/H pump ext. main 13: C/H pump ext. add.		
13.2 / 13.3 / 13.4	Installer	[104]	NO/NC	1: Main zone shut-off valve 2: Add. zone shut-off valve 3: Alarm 6: Cooling/Heating mode 7: DHW on signal (*4)(*5) 9: Bivalent bypass valve	**0: NO** 1: NC		
13.2 / 13.3 / 13.4	Installer	[105]	(*3)(*4): Terminal X42M 15-16 (*5): Terminal X43M 13-14	0: Not connected 1: Main zone shut-off valve 2: Add. zone shut-off valve 3: Alarm 4: External heat source 5: Booster heater (*3) 6: Cooling/Heating mode 7: DHW on signal (*4)(*5) 9: Bivalent bypass valve 10: DHW pump 11: C/H secondary pump 12: C/H pump ext. main 13: C/H pump ext. add.	**0: Not connected (*4)(*5)** 1: Main zone shut-off valve 2: Add. zone shut-off valve 3: Alarm 4: External heat source **5: Booster heater (*3)** 6: Cooling/Heating mode 7: DHW on signal 9: Bivalent bypass valve 10: DHW pump 11: C/H secondary pump 12: C/H pump ext. main 13: C/H pump ext. add.		

(*1) *4V*_(*2) *9W*_
(*3) EPB*_(*4) EPV*_(*5) EPSX*_(*6) EPSXB*_
(*7) *SU*

Field settings table						Installer setting at variance with default value	
Breadcrumb	Setting type	code	Setting description	Applicable when	Range / step / **default value**	Date	Value
13.1 / 13.2 / 13.5	Installer	[106]	NO/NC	1: Main zone shut-off valve 2: Add. zone shut-off valve 3: Alarm 6: Cooling/Heating mode 7: DHW on signal (*4)(*5) 9: Bivalent bypass valve	**0: NO** 1: NC		
13.1 / 13.2 / 13.5	Installer	[107]	(*3)(*4): Terminal X42M 17-18 (*5): Terminal X43M 15-16	0: Not connected 1: Main zone shut-off valve 2: Add. zone shut-off valve 3: Alarm 4: External heat source 6: Cooling/Heating mode 7: DHW on signal 9: Bivalent bypass valve 10: DHW pump 11: C/H secondary pump 12: C/H pump ext. main 13: C/H pump ext. add.	**0: Not Connected (*5)** 1: Main zone shut-off valve 2: Add. zone shut-off valve 3: Alarm 4: External heat source **6: Cooling/Heating mode (*3)(*4)** 7: DHW on signal 9: Bivalent bypass valve 10: DHW pump 11: C/H secondary pump 12: C/H pump ext. main 13: C/H pump ext. add.		
13.1 / 13.2 / 13.5	Installer	[108]	NO/NC	1: Main zone shut-off valve 2: Add. zone shut-off valve 3: Alarm 6: Cooling/Heating mode 7: DHW on signal (*4)(*5) 9: Bivalent bypass valve	**0: NO** 1: NC		
13.2 / 13.3 / 13.4	Installer	[109]	(*4): Terminal X42M 23-24 (*3): Terminal X43M 5-6 (*5): Terminal X42M 11-12	0: Not connected 1: Main zone shut-off valve 2: Add. zone shut-off valve 3: Alarm 4: External heat source 6: Cooling/Heating mode 7: DHW on signal (*4)(*5) 9: Bivalent bypass valve 10: DHW pump 11: C/H secondary pump 12: C/H pump ext. main 13: C/H pump ext. add.	**0: Not connected (*5)** 1: Main zone shut-off valve 2: Add. zone shut-off valve 3: Alarm 4: External heat source 6: Cooling/Heating mode 7: DHW on signal 9: Bivalent bypass valve **10: DHW pump (*3)(*4)** 11: C/H secondary pump 12: C/H pump ext. main 13: C/H pump ext. add.		
13.2 / 13.3 / 13.4	Installer	[110]	NO/NC	1: Main zone shut-off valve 2: Add. zone shut-off valve 3: Alarm 6: Cooling/Heating mode 7: DHW on signal (*4)(*5) 9: Bivalent bypass valve	**0: NO** 1: NC		
13.1 / 13.2 / 13.5	Installer	[111]	(*3)(*4): Terminal X42M 12-13-14 (*5): Terminal X43M 10-11-12	0: Not connected 1: Main zone shut-off valve 2: Add. zone shut-off valve 3: Alarm 4: External heat source 6: Cooling/Heating mode 7: DHW on signal (*4)(*5) 8: 3-way valve (*3) 9: Bivalent bypass valve 10: DHW pump 11: C/H secondary pump 12: C/H pump ext. main 13: C/H pump ext. add.	**0: Not connected (*4)(*5)** 1: Main zone shut-off valve 2: Add. zone shut-off valve 3: Alarm 4: External heat source 6: Cooling/Heating mode 7: DHW on signal **8: 3-way valve (*3)** 9: Bivalent bypass valve 10: DHW pump 11: C/H secondary pump 12: C/H pump ext. main 13: C/H pump ext. add.		
13.6	Installer	[112]	(*3)(*4): Terminal X44M 1-2	(*3)(*4) 0: Not connected 1: External outdoor sensor 2: External indoor sensor	**0: Not connected** 1: External outdoor sensor 2: External indoor sensor		
13.7 / 13.8	Installer	[114]	Terminal X45M 3-4	0: Not connected 3: HV/LV Smart Grid contact 1 4: HV/LV Smart Grid contact 2 5: HP tariff contact 9: Safety thermostat unit 12: Solar input 13: Smart meter contact	**0: Not connected** 3: HV/LV Smart Grid contact 1 4: HV/LV Smart Grid contact 2 5: HP tariff contact 9: Safety thermostat unit 12: Solar input (*3)(*5) 13: Smart meter contact		
13.7 / 13.8	Installer	[115]	NO/NC	0: Not connected 5: HP tariff contact 9: Safety thermostat unit 13: Smart meter contact	**0: NO** 1: NC		
13.7 / 13.8	Installer	[116]	Terminal X45M 5-6	0: Not connected 3: HV/LV Smart Grid contact 1 4: HV/LV Smart Grid contact 2 5: HP tariff contact 9: Safety thermostat unit 12: Solar input 13: Smart meter contact	**0: Not Connected** 3: HV/LV Smart Grid contact 1 4: HV/LV Smart Grid contact 2 5: HP tariff contact 9: Safety thermostat unit 12: Solar input (*3)(*5) 13: Smart meter contact		
13.7 / 13.8	Installer	[117]	NO/NC	0: Not connected 5: HP tariff contact 9: Safety thermostat unit 13: Smart meter contact	**0:NO** 1: NC		
13.7 / 13.8	Installer	[118]	Terminal X45M 7-8	0: Not connected 3: HV/LV Smart Grid contact 1 4: HV/LV Smart Grid contact 2 5: HP tariff contact 9: Safety thermostat unit 12: Solar input 13: Smart meter contact	**0: Not connected** 3: HV/LV Smart Grid contact 1 4: HV/LV Smart Grid contact 2 5: HP tariff contact 9: Safety thermostat unit 12: Solar input (*3)(*5) 13: Smart meter contact		
13.7 / 13.8	Installer	[119]	NO/NC	0: Not connected 5: HP tariff contact 9: Safety thermostat unit 13: Smart meter contact	**0: NO** 1: NC		

(*1) *4V*_(*2) *9W*_
(*3) EPB*_(*4) EPV*_(*5) EPSX*_(*6) EPSXB*_
(*7) *SU*

Field settings table						Installer setting at variance with default value	
Breadcrumb	Setting type	code	Setting description	Applicable when	Range / step / **default value**	Date	Value
13.7 / 13.8	Installer	[120]	Terminal X45M 9-10	0: Not connected 3: HV/LV Smart Grid contact 1 4: HV/LV Smart Grid contact 2 5: HP tariff contact 9: Safety thermostat unit 12: Solar input 13: Smart meter contact	**0: Not Connected** 3: HV/LV Smart Grid contact 1 4: HV/LV Smart Grid contact 2 5: HP tariff contact 9: Safety thermostat unit 12: Solar input (*3)(*5) 13: Smart meter contact		
13.7 / 13.8	Installer	[121]	NO/NC	0: Not connected 5: HP tariff contact 9: Safety thermostat unit 13: Smart meter contact	**0: NO** 1: NC		
13.7 / 13.8	Installer	[122]	Terminal X45M 1-2	0: Not connected 3: HV/LV Smart Grid contact 1 4: HV/LV Smart Grid contact 2 5: HP tariff contact 9: Safety thermostat unit 12: Solar input 13: Smart meter contact	**0: Not connected** 3: HV/LV Smart Grid contact 1 4: HV/LV Smart Grid contact 2 5: HP tariff contact 9: Safety thermostat unit 12: Solar input (*3)(*5) 13: Smart meter contact		
13.7	Installer	[123]	NO/NC	0: Not connected 5: HP tariff contact 9: Safety thermostat unit 13: Smart meter contact	**0: NO** 1: NC		

(*1) *4V*_(*2) *9W*_
(*3) EPB*_(*4) EPV*_(*5) EPSX*_(*6) EPSXB*_
(*7) *SU*

Copyright 2025 Daikin

DAIKIN EUROPE N.V.
Zandvoordestraat 300, B-8400 Oostende, Belgium

4P773392-1A 2025.12